INFORMATION SHEET 11/10/15 TRUSTEES MEETING

ATTACHMENT 4.4

TO: Jim Bridges, Superintendent

FOR: Board of Trustees

FROM: Mindy Maxedon, CBO

ISSUE: RGM Associates Jefferson Change Order #'s 101, 102 and Traina Gymnasium Change Order #'s #027, #031, #032r, #033 and #035

Change orders are reviewed weekly and if accepted by the district, are signed by Jim. Once the projects are complete, RGM will prepare a summary of all change orders and show the net effect.

Jefferson Change Orders:

COR #101:
To relocate book shelves in library per new layout provided, abandon in-slab electrical, patch and provide power in toe kicks at new locations per CCD #68. This change results in a charge of $4,079.00.

COR #102:
To furnish and install a 2 x 2 light fixture near kitchen hood per RFI #380. This change results in a charge of $185.00.

The net charge from the Jefferson change order #'s listed above is $4,264.00.

Please note that all change orders are affecting our contingency. No additional budget is required for these changes. Including the items above, the total net charge for all Jefferson change orders is +$450,638.00.

Traina Gymnasium Change Orders:

COR #027:
To provide irrigation control wiring repair in the field, and installation of new control wiring to existing valves that did not have active control wires. This change results in a charge of $4,045.00.

COR #031:
To revise wall construction at Room C04 from a 1-hour rated to smoke partition; provide additional upright fire sprinklers in stage soffit cavity; add (8) additional upright heads above C06 per CCD #19. This change results in a charge of $5,552.00.

COR #032r:
To furnish and install 4 x 12 pad blocks at straps for simpson hangers per CCD #25 (6 locations). This change results in a charge of $2,132.00.

COR# 033:
To head-out framing members in conflict with HD's at 12 locations where the 8x and 6x beams intersect with glu-lam beams. This change results in a charge of $2,297.00.

COR #035:
To provide furr ceiling framing and fire blocking below HD's at Room C07. This change results in a charge of $2,105.00.

The net change from the Traina change order #'s listed above is + $16,131.00.

Please note that all change orders are affecting our contingency. No additional budget is required for this change. Including the items above, the total net charge for all Traina change orders is +$66,697.00.

letter

DATE: 10/13/15

TO: Jefferson School District
1219 Whispering Wind Dr.
Tracy, CA 95377

ATTN: James Bridges

RE: Jefferson School Replacement
DSA Appl. #: 02-113192
COR #101

Dear James,

We have reviewed the contractor's pricing on COR #101 to relocate book shelves in library per new layout provided, abandon in-slab electrical, patch and provide power in toe kicks at new locations per CCD #68.

We find the pricing of $4,079.00 acceptable and recommend Board of Trustee acceptance.

District Authorization: _____
James W. Bridges

Date: 10/13/15

Thank you.

FROM: Nick Morrissey
pjhm architects
Project Manager

CC: Jamie Ferranti, RGM
Kenneth Podany, PJHM
Paulina Saucedo, PJHM
File 13

pjhm·architects
OC// 24461 Ridge Route Drive #100 • Laguna Hills CA 92653 P// 949-496-6191
SD// 804 Pier View Way #103 • Oceanside CA 92054 P// 760-730-5527

CHANGE ORDER REQUEST 101

Distribution to:
- OWNER ☐
- ARCHITECT ☐
- CONST. MANAGER ☐
- CONTRACTOR ☐
- FIELD ☐
- OTHER ☐

PROJECT: Jefferson Replacement Project
7500 West Linne Road
Tracy, CA 95377

TO: Nick Morrissey, PJHM Architects

Reference: RFI # ____ PCO # ____ ASI# ____
CCA # ____ CCD # 68 IB# ____

COR NUMBER: 101

DATE: October 5, 2015

PROJECT No.: JES-14-01

CONTRACT FOR: School Replacement

CONTRACT DATE: June 12, 2014

Description of work:
Relocate the book shelves in the library per the new layout provided, abandon in-slab electrical, patch, and provide power in toe kicks at new locations per CCD 68.

1. Subcontractor Work (mark-up not to exceed 10%)
(Please attached all required backup, quantities, unit cost, etc., associated with work performed.)

1. Costs from Westmark Products	$	3,000.00		
2. Costs from Darrale Patrias	$	845.77		
SUBTOTAL	$	3,845.77		
Contractor mark-up on Sub work (not to exceed 5%)	$	192.29		
		TOTAL - 1	$	4,038.06

2. Work Performed by Prime Contractor
(Please attached all required backup, quantities, unit cost, etc., associated with work performed.)

1. Material				
2. Supervision				
3. Equipment	$	-		
SUBTOTAL	$	-		
Prime Contractor OH&P (not to exceed 15%)	$	-		
		TOTAL - 2	$	-
		TOTAL - 1 & 2	$	4,038.06
Bond Premium (actual rate, 1%)			$	40.38
TOTAL PROPOSED CHANGE			**$**	**4,079.00**

Extension of Contract Time Proposed 0 Days.

Prepared by:
Ramon Parocua

Date October 5, 2015

WESTMARK PRODUCTS, INC.

Sub Name: _____

EXTRA FIELD WORK AUTHORIZATION—*Billable to Customer*

Fax or email to Westmark Products: Install Manager for approval ... 253-536-0156 or installoverages@westmarkproducts.com

No payment will be made for work that is completed without prior approval and customer signature.
Paperwork must be submitted within 48 hours or risk nonpayment!!
This completed form must be attached to your payment application when applying for payment.

Job #: 10748 Job Name: JeFFerson Date: 10/1/2015

- [x] Approved change by customer (EFWA: customer request, inter-trade coordination, etc...)
- [ ] Trade damage (attach documentation- photos, email, etc...)
- [ ] Field condition changed after dimensioning
- [ ] Change Order *[does NOT require customer signature]*

Estimated Labor:

Hours 0 Description Flat Price Relocate Cabinets

Hours _____ Description _____

Estimated Materials:

Qty _____ Description _____

Qty _____ Description _____

I have requested that the above work be completed and am authorized to obligate the firm listed below to pay Westmark for this additional work. I realize that the time and materials listed above are an estimate. The actual labor and materials required to complete this additional work will be turned into Westmark's estimating department to calculate an actual billing per contract documents.

Authorized by: [signature] **Company:** R Gill & Associates

Title: Super **Date:** 10-1-2015

Not to exceed $ 3000 =

Comments: Relocate Bookcase cabinets in Library per new layout provided by Owner

11721 Steele Street South, Tacoma, WA 98444 Voice (253) 531-3470 Fax (253) 536-0156

DARRALE PATRIAS
ELECTRICAL CONTRACTOR, INC.

2480 N. Walnut Rd. / P.O. Box 1832
Turlock, Ca 95381
(209) 632-6196 Fax (209) 632-4542
Lic No. 348403

September 30, 2015

RGM & Associates
3230 Monument Way
Concord, CA 94518
Attn: Ramon

Re: Jefferson School Replacement

PCO #26: CCD #68

Materials	100.00
Sales tax	8.00
Labor: 8 hours	
@ $81.47/hr	651.76
Overhead & profit	75.98
Bond cost:	10.03
Total cost:	$845.77

DSA 141

APPLICATION FOR CONCURRENCE OF CONSTRUCTION CHANGE DOCUMENT - CCD CATEGORY B

CCD Category B is for construction changes NOT affecting Structural Safety, Fire Life Safety or Accessibility.

This form shall be completed by the Design Professional in General Responsible Charge of the project, in accordance with California Code of Regulations, Title 24, Part 1, Section 4-338 (c) and in compliance with DSA IR A-6.

School District/Owner: Jefferson School District	DSA File #: 39 - 39
Project Name/School: Jefferson School Replacement	DSA App. #: 02 - 113192

APPLICANT

CCD #: 68	Date Submitted: 9/28/15	Attached Pages?: ☐No ☒Yes (1 pages)
Firm Name: PJHM Architects		Contact Name: Nick Morrissey
Email: nick@pjhm.com		Phone Number: (949) 496-6191
Address: 24461 Ridge Route Drive, Suite 100		
City: Laguna Hills	State: CA	Zip:92653

DESIGN PROFESSIONAL IN GENERAL RESPONSIBLE CHARGE

Name of Design Professional in General Responsible Charge: Kenneth J. Podany	
Professional License #: C28889	Discipline: Architect

Design Professional in General Responsible Charge Statement: I attest that the scope of this Construction Change Document does not affect the components or systems of the structural, access or fire-life safety portions of the project.

I understand DSA approval of this CCD is not approval for code compliance, but is concurrence that the changes, as presented, do not affect the structural, access and/or fire-life safety portions of the project.

Signature: _____

DESIGN PROFESSIONAL IN GENERAL RESPONSIBLE CHARGE

DSA STAFF REQUIRING/AUTHORIZING THIS SUBMITTAL (if none do not submit this CCD to DSA)

DSA Employee Name :

Brief Description of construction change (attach additional sheets if needed):

Revise the layout of casework in library per attached sketch.

List of DSA approved drawings affected by this CCD:

DSA USE ONLY

Group	Status			Reviewed by	Concurred by	Date
SSS	☐ Approved	☐ Not Approved	☐ Not Required			
FLS	☐ Approved	☐ Not Approved	☐ Not Required			
ACS	☐ Approved	☐ Not Approved	☐ Not Required			
STATUS OF CCD:		☐ Approved	☐ Disapproved (resubmittal as CCD Category A is required)			

Notes
- Revise the library casework as shown highlighted
- Abandon in slab electrical and data and patch for carpet finish

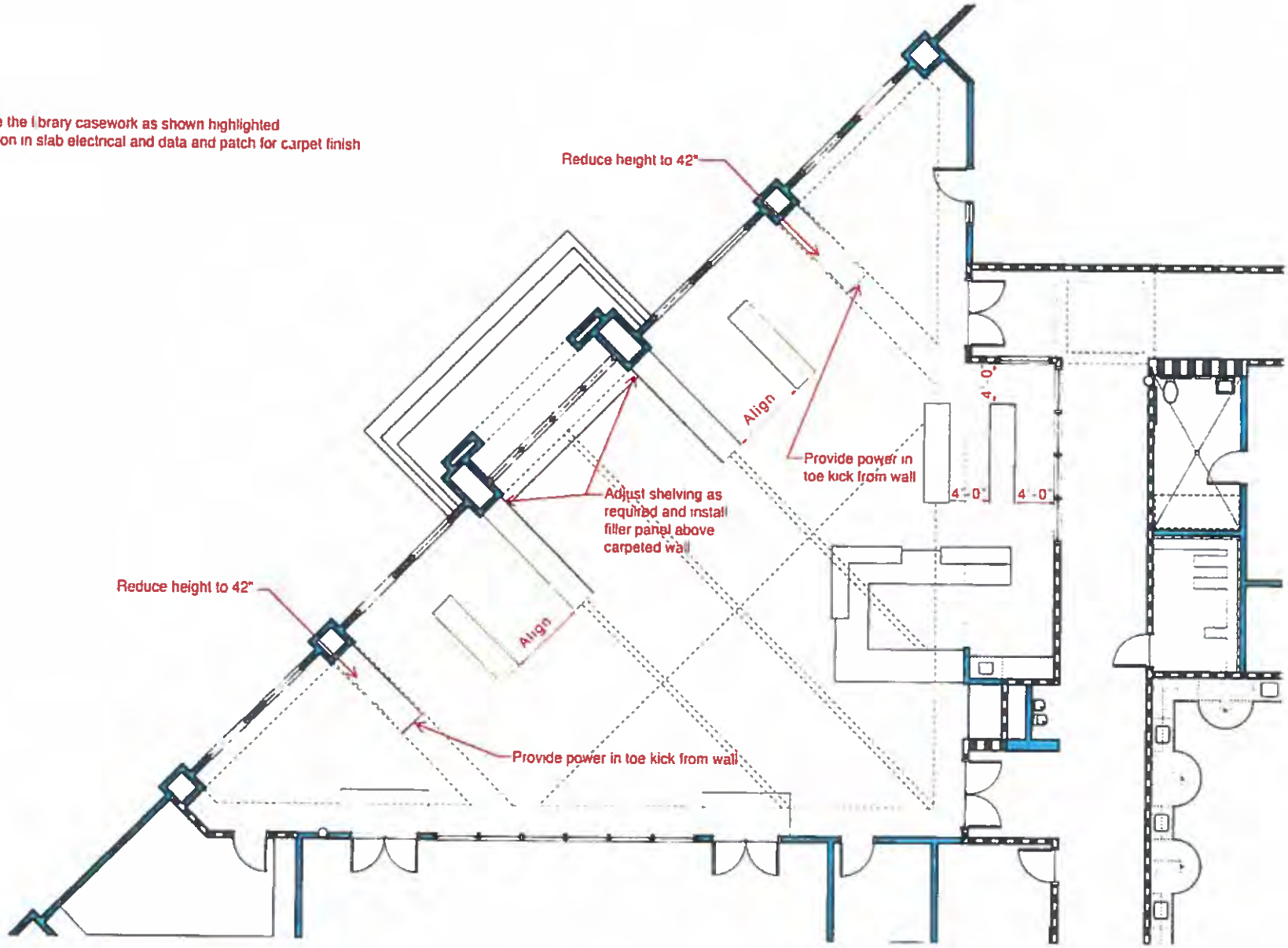

letter

DATE: 10/13/15

TO: Jefferson School District
1219 Whispering Wind Dr.
Tracy, CA 95377

ATTN: James Bridges

RE: Jefferson School Replacement
DSA Appl. #: 02-113192
COR #102

Dear James,

We have reviewed the contractor's pricing on COR #102 to furnish and install a 2x2 light fixture near kitchen hood per RFI #380.

We find the pricing of $185.00 acceptable and recommend Board of Trustee acceptance.

District Authorization: _____
James W. Bridges

Date: 10/13/15

Thank you.

FROM: Nick Morrissey
pjhm architects
Project Manager

CC: Jamie Ferranti, RGM
Kenneth Podany, PJHM
Paulina Saucedo, PJHM
File 13

pjhm·architects
OC /// 24461 Ridge Route Drive #100 • Laguna Hills CA 92653 P /// 949-496-6191
SD /// 804 Pier View Way #103 • Oceanside CA 92054 P /// 760-730-5527

CHANGE ORDER REQUEST 102

Distribution to:
- OWNER ☐
- ARCHITECT ☐
- CONST. MANAGER ☐
- CONTRACTOR ☐
- FIELD ☐
- OTHER ☐

PROJECT: Jefferson Replacement Project
7500 West Linne Road
Tracy, CA 95377

TO: Nick Morrissey, PJHM Architects

Reference: RFI # 380 PCO # ____ ASI# ____
CCA # ____ CCD # ____ IB# ____

COR NUMBER: 102

DATE: October 12, 2015

PROJECT No.: JES-14-01

CONTRACT FOR: School Replacement

CONTRACT DATE: June 12, 2014

Description of work:
Furnish and install a 2x2 ceiling light fixture in liue of a 2x4 next to the kitchen hood due to limited ceiling space.

1. Subcontractor Work (mark-up not to exceed 10%)
(Please attached all required backup, quantities, unit cost, etc., associated with work performed.)

1. Costs from Darrale Patrias	$ 174.38	
SUBTOTAL	$ 174.38	
Contractor mark-up on Sub work (not to exceed 5%)	$ 8.72	
TOTAL - 1		$ 183.10

2. Work Performed by Prime Contractor
(Please attached all required backup, quantities, unit cost, etc., associated with work performed.)

1. Material		
2. Supervision		
3. Equipment	$ -	
SUBTOTAL	$ -	
Prime Contractor OH&P (not to exceed 15%)	$ -	
TOTAL - 2		$ -
TOTAL - 1 & 2		$ 183.10
Bond Premium (actual rate, 1%)		$ 1.83
TOTAL PROPOSED CHANGE		**$ 185.00**

Extension of Contract Time Proposed 0 Days.

Prepared by:
Ramon Parocua

Date October 12, 2015

DARRALE PATRIAS
ELECTRICAL CONTRACTOR, INC.
2480 N. Walnut Rd. / P.O. Box 1832
Turlock, Ca 95381
(209) 632-6196 Fax (209) 632-4542
Lic No. 348403

October 9, 2015

RGM & Associates
3230 Monument Way
Concord, CA 94518
Attn: Ramon

Re: Jefferson School Replacement

PCO #27: RFI 380 Light Fixture near Kitchen Hood

Materials	112.64
Sales tax	9.01
Freight	35.00
Overhead & profit	15.67
Bond cost:	2.07
Total cost:	$174.38

QUOTE # DVR1913262 DATE: 10-09-15 PAGE 1

Consolidated Electrical Distributors
1343 N. Emerald Avenue
Modesto, CA 95352
Phone: (209)524-5591
Fax: (209)524-4644

To: MICHELE NEUHUYS
DARRALE PATRIAS ELECTRICAL
2480 N. WALNUT ROAD
PO BOX 1832
TURLOCK, CA 95381
(209)632-6196 Fax (209)632-4542

Proj: JEFFERSON 2A 2X2

Arch:
Spec:
Engr:
Cont:
Remarks:

Qty	Type	Mfg	Description	Price
1	2A	MET	2GC-317A125INV-UNV-OS-QHE1/	
			2X32T8UNVPSNMC-U	
3	2A	SYL	FO17/835	
4	2A	MET	EQ-CLIP-U	
			PLUS FREIGHT	
			4-6 WEEK LEAD TIME	
			Total ====	$112.64

F.O.B. Per MFG | Terms: Net 30 Days | Lead time:

Prices firm for entry by: 10 Days | Shipment by: 30 Days

Subject to manufacturer's published terms and conditions of sale.
Quotation is void if changed. Complete quote must be used.

Printed 10/09/15 13:23:50 Per: CATHY JONES

COOPER LIGHTING - METALUX®

DESCRIPTION

The GC Series features a 4-3/4" deep para-contoured fixture housing, high reflectivity and optimum lamp to lens spacing. The series produces total uniformity of light in the luminous area and is compatible with all of today's popular ceiling systems and is available with a number of options and accessories for application versatility.

The specification luminaire is designed to offer maximum efficiency and performance for today's unique interior specifications. The GC Series is an excellent choice for commercial office spaces, schools, hospitals or retail merchandising areas.

Catalog #	2GC-317A125INV-UNV-OS-QHE1/2X32T8UNV PSNMC-U	Type
Project	JEFFERSON SCHOOL	2A
Comments		Date
Prepared by		

SPECIFICATION FEATURES

Construction

4-3/4" deep, para-contoured housing, die formed, prime cold rolled steel. Die embossed housing has full length die formed stiffeners for added strength. Deep "V" ballast/wireway cover easily removed without tools. Die formed captive lampholder bracket fully encloses lampholder wiring permitting easy lampholder replacement. Heavy endplates are securely attached with interlocking tabs and screws. Four auxiliary fixture end suspension points provided. KOs for continuous row wiring. Endplates have integral Grid-Lock feature for safety and convenience.

Electrical*

Ballasts are CBM/ETL Class "P" and are positively secured by mounting bolts. Pressure lock lampholders. UL/CUL listed. Suitable for damp locations.**

Finish

Multistage, iron phosphate pretreatment ensures maximum bonding and rust inhibitor. Lighting grade, baked white enamel finish.

Hinging/Latching

Positive cam action spring loaded steel latches with baked white enamel finish. Safety-lock T-hinges allow hinging and latching either side.

Frame/Shielding

Die formed, heavy gauge, flat steel door with reinforced mitered corners and baked white enamel finish. Positive light seals. Light stabilized 100% virgin acrylic prismatic shielding. Standard #12 pattern. Optional shielding available.

Controls

Fifth Light ballast options are offered for both 0-10V continuous dimming and DALI applications. Combine with energy-saving products like occupancy sensors, daylighting controls, and lighting relay panels from Cooper Controls (www.coopercontrol.com) to maximize energy savings.

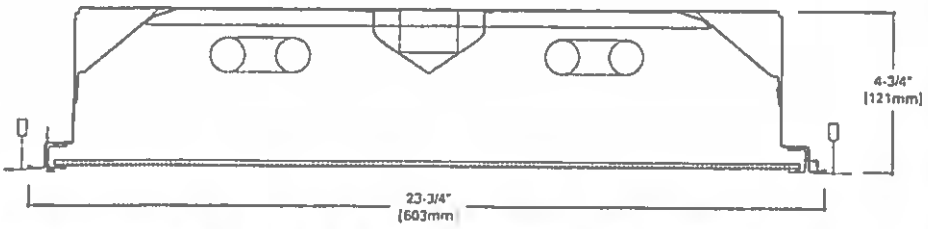

MOUNTING DATA

See page 2

LAMP CONFIGURATIONS

See page 2

DOOR FRAMES

GC
Flat, White Steel

GCFA
Flat, Extruded White Aluminum

GCRA
Deep, Recessed, Extruded White Aluminum

CEILING COMPATIBILITY

G
Grid/Lay-in Standard

G
Concealed T

G
Slot Grid

F
Aluminum Flange Trim With Supporting Swing Gates

MZ
Modular Trim With Supporting Swing Gates

Ceiling Type	Trim Type
Exposed Grid	G
Concealed T	G
Slot Grid	G
Flange	F
Concealed "T" or "Z"	MZ
Metal Pan	MZ

(Verify compatibility consult Pre Sales Technical Support.)

2GC
217
2U1-5/8
2U6T8
317
3U1-5/8
417

2' X 2' TROFFER
2, 3 OR 4 LAMPS

Specification Deep Troffer

powered by fifthlight

ENERGY DATA

Input Watts:
EB Ballast & STD Lamps
217 (3G), 2U1-5/8 (01), 2U6T8 (01), 317 (58), 3U1-5/8 (88), 417 (03)

Luminaire Efficacy Rating
LER = FL-57
Catalog Number: 2GC-2U6T8

Yearly Cost of 1000 lumens, 3000 hrs at .08 KWH = $4.21

Luminaire Efficacy Rating
LER = FL-63
Catalog Number: 2GC-2U1-5/8

Yearly Cost of 1000 lumens, 3000 hrs at .08 KWH = $3.81

*Reference the lamp/ballast data in the Technical Section for specific lamp/ballast requirements.

**Consult Pre Sales Technical Support.

LAMPS CONTAIN MERCURY. DISPOSE ACCORDING TO LOCAL, STATE OR FEDERAL LAWS

LINEAR DISCONNECT
Safe and convenient means of disconnecting power.

ADF090606

PHOTOMETRICS

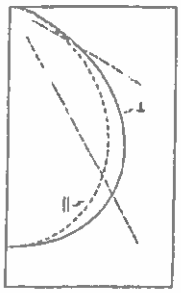

2GC-2U6T8A
Electronic Ballast
FB31T8/TL41/6 Lamps
2600 Lumens
Spacing criterion: (∥) 1.2 x mounting height, (⊥) 1.3 x mounting height
Efficiency 68.1%
Test Report: 2GC2U6T8A.IES
LER = FL-57
Yearly Cost of 1000 lumens, 3000 hrs at .08 KWH = $4.21

Candela

Angle	Along ∥	45°	Across ⊥
0	1464	1464	1464
5	1465	1458	1462
10	1448	1443	1456
15	1410	1420	1441
20	1368	1380	1409
25	1290	1323	1356
30	1204	1240	1270
35	1096	1134	1172
40	968	1010	1072
45	816	863	953
50	651	711	797
55	501	550	699
60	363	382	420
65	267	253	304
70	212	169	237
75	160	133	192
80	120	113	145
85	66	64	78
90	0	0	0

Coefficients of Utilization

Effective floor cavity reflectance 20%

rc	80%				70%				50%			30%			10%			0%
rw	70	50	30	10	70	50	30	10	50	30	10	50	30	10	50	30	10	0
RCR																		
0	81	81	81	81	79	79	79	79	76	76	76	72	72	72	69	69	69	68
1	75	72	70	67	73	71	68	66	68	66	64	65	64	62	63	62	60	59
2	69	64	60	57	68	63	60	56	61	58	55	59	56	54	57	55	53	51
3	64	58	53	48	63	57	52	49	55	51	48	53	50	47	51	49	46	45
4	59	52	47	43	58	51	46	42	49	45	42	48	44	41	46	43	41	39
5	54	46	41	37	53	46	40	37	44	40	36	43	39	36	42	38	35	34
6	50	42	36	32	49	41	36	32	40	35	32	39	35	32	38	34	31	30
7	47	38	32	28	45	37	32	28	36	32	28	35	31	28	34	31	28	26
8	43	34	29	25	42	34	28	25	33	28	25	32	28	24	31	27	24	23
9	40	31	26	21	39	30	25	21	29	25	21	29	24	21	28	24	21	20
10	37	28	23	19	36	28	22	19	27	22	19	26	22	19	26	22	19	18

Zonal Lumen Summary

Zone	Lumens	%Lamp	%Fixture
0-30	1160	27.1	32.6
0-40	1859	35.8	52.5
0-60	3020	58.1	85.3
0-90	3541	68.1	100.0
0-180	3541	68.1	100.0

Typical VCP Percentages

	Height Along		Height Across	
Room Size (Ft.)	8.5'	10.0'	8.5'	10.0'
20 x 20	64	68	61	66
30 x 30	57	61	54	58
30 x 60	48	51	43	47
60 x 30	58	63	56	61
60 x 60	48	51	44	48

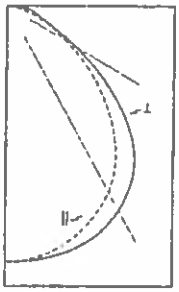

2GC-2U1-5/8A
Electronic Ballast
FBO31/35K Lamps
2725 Lumens
Spacing criterion: (∥) 1.2 x mounting height, (⊥) 1.3 x mounting height
Efficiency 70.5%
Test Report. 2GC2U158A.IES
LER = FL-63
Yearly Cost of 1000 lumens, 3000 hrs at .08 KWH = $3.81

Candela

Angle	Along ∥	45°	Across ⊥
0	1563	1563	1563
5	1553	1560	1565
10	1528	1549	1560
15	1484	1525	1554
20	1440	1491	1535
25	1368	1438	1497
30	1275	1363	1434
35	1160	1265	1346
40	1016	1135	1226
45	852	970	1057
50	681	790	847
55	528	597	636
60	407	412	449
65	307	271	328
70	230	185	258
75	173	140	212
80	129	126	160
85	67	69	80
90	0	0	0

Coefficients of Utilization

Effective floor cavity reflectance 20%

rc	80%				70%				50%			30%			10%			0%
rw	70	50	30	10	70	50	30	10	50	30	10	50	30	10	50	30	10	0
RCR																		
0	84	84	84	84	82	82	82	82	78	78	78	76	76	76	72	72	72	71
1	78	75	72	70	76	73	71	69	70	68	67	66	66	66	65	64	63	61
2	72	67	63	59	70	65	62	58	63	60	57	61	58	56	59	57	55	53
3	66	60	55	51	65	59	54	50	57	53	50	56	52	49	53	50	48	46
4	61	54	48	44	60	53	48	44	51	47	43	50	46	43	48	45	42	41
5	56	48	42	38	55	47	42	38	46	41	37	45	40	37	43	40	37	35
6	52	43	38	34	51	43	37	33	42	37	33	40	36	33	39	35	32	31
7	48	39	34	30	47	39	33	29	38	33	29	37	32	29	36	32	29	27
8	45	35	30	26	43	35	29	26	34	29	26	33	29	26	32	28	25	24
9	41	32	26	22	40	31	26	22	31	26	22	30	26	22	29	25	22	21
10	38	29	23	20	37	29	23	20	28	23	20	27	23	19	27	22	19	18

Zonal Lumen Summary

Zone	Lumens	%Lamp	%Fixture
0-30	1239	22.8	32.3
0-40	2022	37.1	52.8
0-60	3278	60.2	85.3
0-90	3843	70.5	100.0
0-180	3843	70.5	100.0

Typical VCP Percentages

	Height Along		Height Across	
Room Size (Ft.)	8.5'	10.0'	8.5'	10.0'
20 x 20	62	67	56	63
30 x 30	54	58	50	55
30 x 60	46	48	40	44
60 x 30	56	60	53	58
60 x 60	45	48	42	45

MOUNTING DATA

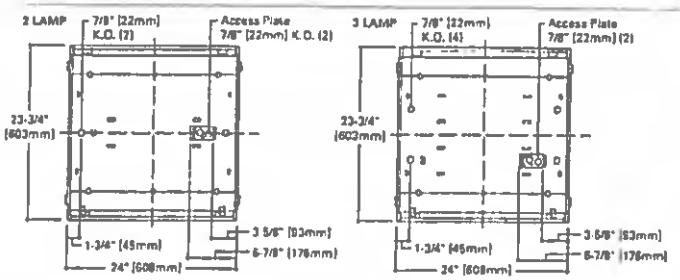

LAMP CONFIGURATIONS

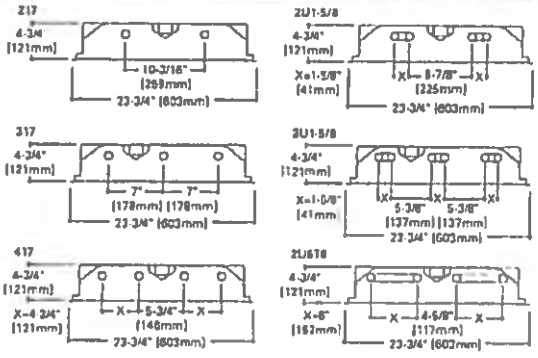

REQUEST FOR INFORMATION

RGM and ASSOCIATES

CONSTRUCTION MANAGERS

CONTRACTORS

BUILDERS

RFI #: 380

Description: Light Fixture near Kitchen Hood

To: **PJHM**
Attention: **Nick Morrissey**

E-mail To: nick@pjhm.com

Project: **Jefferson School Replacement**
Jefferson School District

Subcontractor: Patrias Electric/ Arrow Acoustics

Date Submitted: 10/05/15
Date Needed: 10/06/15

Urgent ☒
Specification/Plan: A-4.4

Question:
The kitchen hood shown on the reflected ceiling plan, A-4.4 shows the hood size at 11'-6". The actual hood size is 12'-6" which means the light fixture next to the hood will not fit properly. We recommend changing the light fixture size to a 2x2. See attached. Please advise if this is acceptable.

Possible Cost Impact ☐ Possible Time Impact ☐

Response:

Date Answered:

No exception taken to proposed solution.

Erin Mapes - tk1sc - 10/6/15

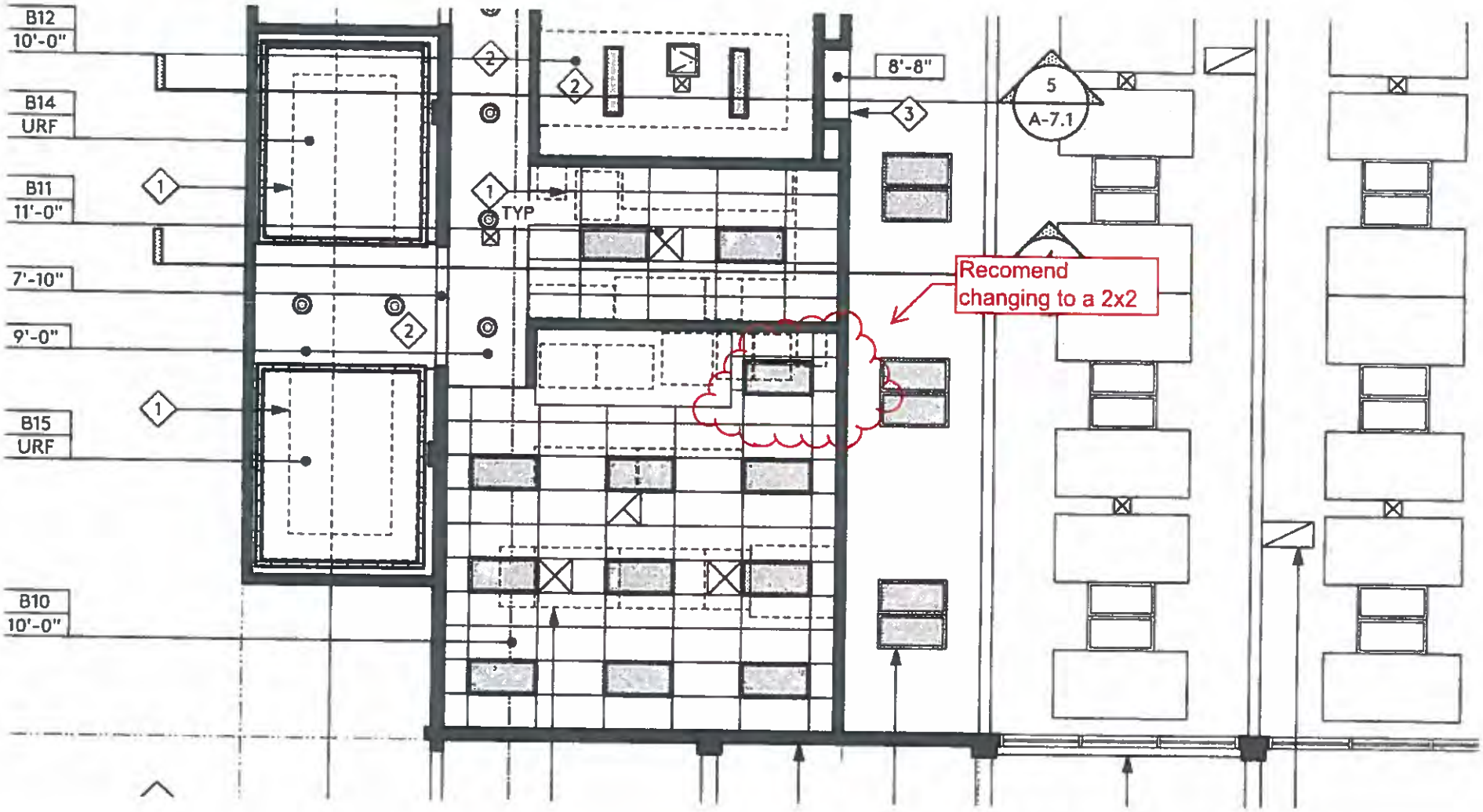
B12
10'-0"
B14
URF
B11
11'-0"
7'-10"
9'-0"
B15
URF
B10
10'-0"
8'-8"
TYP
5
A-7.1
Recomend
changing to a 2x2

letter

DATE: 10/13/15

TO: Jefferson School District
1219 Whispering Wind Dr.
Tracy, CA 95377

ATTN: James Bridges

RE: Anthony Traina Gym and Performance Center
DSA Appl. #: 02-113192
COR #027

Dear James,

We have reviewed the contractor's pricing on COR #027 to provide irrigation control wiring repair in the field, and installation of new control wiring to existing valves that did not have active control wires.

We find the pricing of $4,045.00 acceptable and recommend Board of Trustee acceptance.

District Authorization: _____
James W. Bridges

Date: 10/13/15

Thank you.

FROM: Nick Morrissey
pjhm architects
Project Manager

CC: Ramon Parocua, RGM
Kenneth Podany, PJHM
File 13

pjhm·architects
OC// 24461 Ridge Route Drive #100 • Laguna Hills CA 92653 P// 949-496-6191
SD// 804 Pier View Way #103 • Oceanside CA 92054 P// 760-730-5527

CHANGE ORDER REQUEST 027

Distribution to:
- OWNER ☐
- ARCHITECT ☐
- CONST. MANAGER ☐
- CONTRACTOR ☐
- FIELD ☐
- OTHER ☐

PROJECT: Anthony Traina Gym and Performance Center
4256 Windsong Drive
Tracy, CA 95377

TO: Nick Morrissey, PJHM Architects

Reference: RFI # 71 PCO # _____ ASI# _____
CCA # _____ CCD # _____ IB# _____

COR NUMBER: 027

DATE: September 24, 2015

PROJECT No.: JES-14-01

CONTRACT FOR: New Gymnasium

CONTRACT DATE: November 1, 2014

Description of work:
Irrigation control wiring repair in the field and installation of new control wiring to existing valves that did not have active control wires.

1. Subcontractor Work (mark-up not to exceed 10%)
(Please attached all required backup, quantities, unit cost, etc., associated with work performed.)

1. Costs from Marina Landscape, Inc.	$	5,086.19		
2. Control Wire Allowance included in GMP	$	(1,275.00)		
SUBTOTAL	$	3,811.19		
Contractor mark-up on Sub work (not to exceed 5%)	$	190.56		
		TOTAL - 1	$	4,001.75

2. Work Performed by Prime Contractor
(Please attached all required backup, quantities, unit cost, etc., associated with work performed.)

Materials	$	-		
Labor	$	-		
Equipment	$	-		
SUBTOTAL	$	-		
Prime Contractor OH&P (not to exceed 15%)	$	-		
		TOTAL - 2	$	-
		TOTAL - 1 & 2	$	4,001.75
Bond Premium (actual rate, 1.06%)			$	42.42
		TOTAL PROPOSED CHANGE	**$**	**4,045.00**

Extension of Contract Time Proposed 0 Days.

Prepared by:

Ramon Parocua

Date September 24, 2015

POST BID REQUEST FOR INFORMATION

CONSTRUCTION MANAGERS

CONTRACTORS

BUILDERS

RFI #: 71

Description: Existing Irrigation Wires – No Tone

To: PJHM
Attention: Nick Morrissey
E-mail To: nick@pjhm.com

Project: Anthony Traina New Gym & Performance Center
Jefferson School District

Subcontractor: Marina Landscape

Date Submitted: 4/1/15
Date Needed: 4/3/15

Priority: Urgent ☐ Important ☒ Routine ☐
Specification/Plan: 32 80 00

Question:
While performing the cut and cap, Marina encountered twelve (12) wires that do not tone signal back to the irrigation controllers. It is unknown what these wires operate or where they need to be connected. Please advise what to do with these wires. Marina can continue to investigate at additional compensation. These wires are not shown on as-built and are unforeseen. See attached.

Possible Cost impact ☐

Possible Time impact ☐

Response:

Response By:

Date Answered:

Please coordinate onsite meeting with district M&O staff and verify where Wires go and if they infact abandoned.
Once decision has been made, please provide final decision to IDG landscape Architects for Record.

RGM and ASSOCIATES
3230 Monument Way
Concord, CA 94518

CSL# 509513

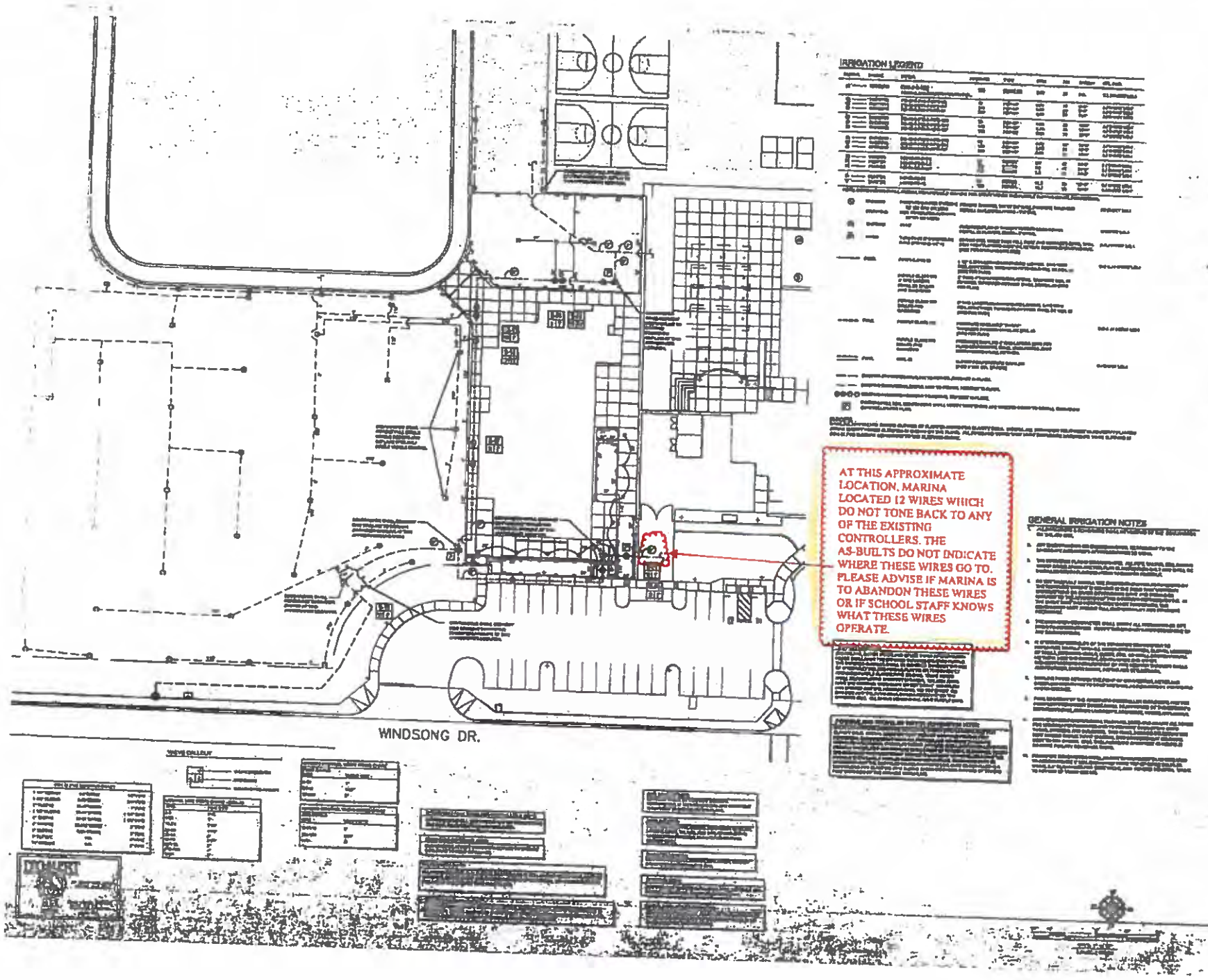
IRRIGATION LEGEND
GENERAL IRRIGATION NOTES
AT THIS APPROXIMATE LOCATION, MARINA LOCATED 12 WIRES WHICH DO NOT TONE BACK TO ANY OF THE EXISTING CONTROLLERS. THE AS-BUILTS DO NOT INDICATE WHERE THESE WIRES GO TO. PLEASE ADVISE IF MARINA IS TO ABANDON THESE WIRES OR IF SCHOOL STAFF KNOWS WHAT THESE WIRES OPERATE.
WINDSONG DR.
pjhm architects
ANTHONY TRAINA SCHOOL
GYMNASIUM AND
PERFORMANCE CENTER BUILDING
JEFFERSON SCHOOL DISTRICT
LANDSCAPE IRRIGATION PLAN
L1.1

Marina Landscape, Inc.

CHANGE ORDER REQUEST
No. 00002

5779 Preston Avenue
Livermore, CA 94551

Phone: (925) 243-0288
Fax: (925) 243-0988

TITLE: Working & Fixing of Wires

DATE: 6/16/2015

PROJECT: ANTHONY TRAINA GYM

JOB: 314018

TO: Attn: Ramon Parocua
RGM & Associates
3230 Monument Way
Concord, CA 94518
Phone: (209) 831-9314 Fax: (209) 831-9336

CONTRACT NO: 1

RE: **To:** **From:** **Number:**

DESCRIPTION OF PROPOSAL

This change order is for working on exposed wires in the area where gym is being built, tonning, trenching & backfilling from existing valve to install wires to valve that did not have wires.

Item	Description	Stock#	Quantity	Units	Unit Price	Tax Rate	Tax Amount	Net Amount
00001	EWT- 58958		1.000	LS	$1,202.02	0.00%	$0.00	~~$1,202.02~~ 1101.85
00002	EWT-58959		1.000	LS	$1,049.65	0.00%	$0.00	~~$1,049.65~~ 982.34
00003	EWT-58960		1.000	LS	$1,049.65	0.00%	$0.00	~~$1,049.65~~ 982.34
00004	EWT-58961		1.000	LS	$407.74	0.00%	$0.00	~~$407.74~~ 373.76
00005	EWT-58962		1.000	LS	$543.65	0.00%	$0.00	~~$543.65~~ 498.34
00006	EWT-58963		1.000	LS	$1,251.89	0.00%	$0.00	~~$1,251.89~~ 1147.56

Unit Cost:	~~$5,504.60~~
Unit Tax:	$0.00
Lump Sum:	$0.00
Lump Tax:	$0.00
Total:	~~$5,504.60~~ 5,086.19

(10% Mark-Up)

Time Extension.....0 Days

By: _____
Ramon Parocua

Date:

By: _____
Gonsalo Jaime

Date: 6/16/15

Expedition ®

DAILY EXTRA WORK REPORT

Sub: MLI Bill: 4.0 Job: 314018 $1,202.02

Jefferson School District

Contractor Job: 314018 - Anthony Traina Gym Project

Work Performed By: Marina Landscape, Inc. (For RGM & ASSOCIATES)

Description of Work: Tonning Of Wires Were Mainline & Wires Were Cut.

Ticket No. 58958 ☒ Signed

Change Order	003
Billing Number	4.0
Report Date	6/16/2015
Perform Date	4/24/2015

Labor Charges

	Craft ID	Employee Name	RT Hrs	OT Hrs	Subs Units	RT Rate	OT Rate	Subs Rate	Extended
L01	FTR FTR	Foreman	8.00			68.580			548.64
L02	LBR LBR	L Laborer, Journeyman	8.00			56.630			453.04

Labor Charges	
RT Labor	1,001.68
OT Labor	0.00
Subtotal Labor	1,001.68
Subsistence	0.00
Other Expenses	0.00
MU ~~20.00%~~ 10%	~~200.34~~ 100.17
Labor Total	1,202.02

Equipment Charges

Material Charges

Activity Total	1,202.02
	1101.85
Bill Total +	~~1,202.02~~

For Owner/Resident Engineer's Use Only

☐ New Bill ☐ Approved for Payment Date of Action:

☐ Resubmittal ☐ Returned for Correction Date Received:

Accepted:

Customer: Date:

Contractor: Date:

Page 1

NTS Universal/Special Bill Form

www.ewbills.com

58958

MARINA Still Growing

Daily Extra Work Report

Billed to: R. B. M & Associates Job No. /Contract: 314018 Cost Code #

Location: Anthony Irvine Gym Date Performed: 4/24/15 Date of Report: 5/7/15

Description of Work: Toning of Wire Rope Machine & Wire rope cut.

QTY.	DESCRIPTION	HOURS	HOURLY RATE	EXTENDED AMOUNTS
1	Foreman	8		
1	Laborer	8		
	TOTAL COST OF LABOR			
EQUIPMENT NO.				
MATERIALS		QUANTITY	AMOUNT	
COMMENTS AREA				
	TOTAL COST OF EQUIPMENT AND MATERIALS	B		

The above record is complete and correct

Francisco Mejia
Contractor Representative

Marc Ho
Customer's Signature

+20% on Labor Cost	(A)	
+15% on Equipment & Materials Cost	(B)	
+10% on Labor, Equipment & Materials Cost If Work Performed is by Approved Subcontractor	(C)	
SUB-TOTAL THIS REPORT		
+ 1 % on Subtotal	(D)	
TOTAL THIS REPORT		

MARINA LANDSCAPE, INC.

1900 S. Lewis Street, Anaheim, California 92805 Phone 714-939-6600 Fax: 714 935-1199

Contractor's License Number 492862 • Web Site: www.marinaco.com

White - Accounting Yellow - Field Pink - Owner/Agency

DAILY EXTRA WORK REPORT

Sub: MLI Bill: 5.0 Job: 314018 $1,049.65

Jefferson School District

Contractor Job: 314018 - Anthony Traina Gym Project

Work Performed By: Marina Landscape, Inc. (For RGM & ASSOCIATES)

Description of Work: Trench From Existing Valve Were Extra Wires Are Hot To The Valve That Does Not

Ticket No. 58959 ☒ Signed

Change Order	003
Billing Number	5.0
Report Date	6/16/2015
Perform Date	4/27/2015

Labor Charges

	Craft ID	Employee Name	RT Hrs	OT Hrs	Subs Units	RT Rate	OT Rate	Subs Rate	Extended
L01	LBR LBR	L Laborer, Journeyman	8.00			56.630			453.04

Equipment Charges

	Equipment ID	Description	RT Hrs	OT Hrs	RT Rate	OT Rate	Delay Factor	Extended
E01	639.1	Dingo Trencher	8.00		55.000			440.00

Labor Charges		
RT Labor		453.04
OT Labor		0.00
Subtotal Labor		453.04
Subsistence		0.00
Other Expenses		0.00
MU	~~20.00%~~	~~90.61~~ 45.30
Labor Total	10%	~~543.65~~ 498.34
Equipment Charges		
Subtotal	10%	440.00
MU	~~15.00%~~	~~66.00~~ 44.00
Equipment Total		~~506.00~~ 484.00
Material Charges		
Activity Total		1,049.65
		982.34
Bill Total +		~~1,049.65~~

Page 1

For Owner/Resident Engineer's Use Only

☐ New Bill ☐ Approved for Payment Date of Action:

☐ Resubmittal ☐ Returned for Correction Date Received:

Accepted:

Customer: Date:

Contractor: Date:

NTS Universal/Special Bill Form

www.ewbills.com

58959

MARINA Still Growing

Daily Extra Work Report

Billed to: R. S. M & Associates Job No. /Contract: 314018 Cost Code #

Location: Anthony Trauma Gym Date Performed: 4/27/15 Date of Report: 5/7/15

Description of Work: Trench from existing Valve over other side is foot to Valve that does not have hot line.

QTY.	DESCRIPTION	HOURS	HOURLY RATE	EXTENDED AMOUNTS
1	Labour	8		
	TOTAL COST OF LABOR			
EQUIPMENT NO.				
1	Dingo Bobcat	8		
MATERIALS		QUANTITY	AMOUNT	
COMMENTS AREA				
	TOTAL COST OF EQUIPMENT AND MATERIALS	B		

The above record is complete and correct

Contractor Representative

Customer's Signature

+20% on Labor Cost	(A)	
+15% on Equipment & Materials Cost	(B)	
+10% on Labor, Equipment & Materials Cost If Work Performed is by Approved Subcontractor	(C)	
SUB-TOTAL THIS REPORT		
+ 1 % on Subtotal	(D)	
TOTAL THIS REPORT		

MARINA LANDSCAPE, INC.
1900 S. Lewis Street, Anaheim, California 92805 Phone 714-939-6600 Fax: 714 935-1199
Contractor's License Number 492862 • Web Site: www.marinaco.com

White - Accounting Yellow - Field Pink - Owner/Agency

DAILY EXTRA WORK REPORT

Sub: MLI Bill: 6.0 Job: 314018 $1,049.65

Jefferson School District

Contractor Job: 314018 - Anthony Traina Gym Project

Work Performed By: Marina Landscape, Inc. (For RGM & ASSOCIATES)

Description of Work: Completion Of Trenching, Backfilling& Installing Wire To Valve That Does Not Have

Ticket No. 58960 ☒ Signed

Change Order	003
Billing Number	6.0
Report Date	6/16/2015
Perform Date	4/28/2015

Labor Charges

Craft ID	Employee Name	RT Hrs	OT Hrs	Subs Units	RT Rate	OT Rate	Subs Rate	Extended
L01 LBR LBR	L Laborer, Journeyman	8.00			56.630			453.04

Equipment Charges

Equipment ID	Description	RT Hrs	OT Hrs	RT Rate	OT Rate	Delay Factor	Extended
E01 639.1	Dingo Trencher	8.00		55.000			440.00

Labor Charges		
RT Labor	453.04	
OT Labor	0.00	
Subtotal Labor	453.04	
Subsistence	0.00	
Other Expenses	0.00	
MU ~~20.00%~~ 10%	~~90.61~~	45.30
Labor Total	~~543.65~~	498.34

Equipment Charges		
Subtotal 10%	440.00	
MU ~~15.00%~~	~~66.00~~	44.00
Equipment Total	~~506.00~~	484.00

Material Charges

Activity Total	1,049.65
	982.34
Bill Total +	~~1,049.65~~

Page 1

For Owner/Resident Engineer's Use Only

☐ New Bill ☐ Approved for Payment Date of Action:

☐ Resubmittal ☐ Returned for Correction Date Received:

Accepted:

Customer: Date:

Contractor: Date:

NTS Universal/Special Bill Form

www.ewbills.com

58960

MARINA Still Growing

Daily Extra Work Report

Billed to: R. H. M & Associates Job No. /Contract: 314018 Cost Code #

Location: Anthony Travia Gym Date Performed: 4/28/15 Date of Report: 5/7/15

Description of Work: Completion of trenching backfilling & installing wire to valve that does not have that wire.

QTY.	DESCRIPTION	HOURS	HOURLY RATE	EXTENDED AMOUNTS
1	Labor	8		
	TOTAL COST OF LABOR			
EQUIPMENT NO.				
1	Diego Bobcat	8		
MATERIALS		QUANTITY	AMOUNT	
COMMENTS AREA				
	TOTAL COST OF EQUIPMENT AND MATERIALS	B		

The above record is complete and correct

Francisco Muñoz
Contractor/ Representative

Marc Hales
Customer's Signature

+20% on Labor Cost	(A)	
+15% on Equipment & Materials Cost	(B)	
+10% on Labor, Equipment & Materials Cost If Work Performed is by Approved Subcontractor	(C)	
SUB-TOTAL THIS REPORT		
+ 1 % on Subtotal	(D)	
TOTAL THIS REPORT		

MARINA LANDSCAPE, INC.
1900 S. Lewis Street, Anaheim, California 92805 Phone 714-939-6600 Fax: 714 935-1199

Contractor's License Number 492882 • Web Site: www.marinaco.com White - Accounting Yellow - Field Pink - Owner/Agency

DAILY EXTRA WORK REPORT

Sub: MLI Bill: 1.0 Job: 314018 $407.74

Jefferson School District

Contractor Job: 314018 - Anthony Traina Gym Project

Work Performed By: Marina Landscape, Inc. (For RGM & ASSOCIATES)

Description of Work: Looking & Find Exposed Wires In Area Where Gym Is Being Built.

Ticket No. 58961 ☒ Signed

Change Order	003
Billing Number	1.0
Report Date	6/16/2015
Perform Date	4/17/2015

Labor Charges

	Craft ID	Employee Name	RT Hrs	OT Hrs	Subs Units	RT Rate	OT Rate	Subs Rate	Extended
L01	LBR LBR	L Laborer, Journeyman	3.00			56.630			169.89
L02	LBR LBR	L Laborer, Journeyman	3.00			56.630			169.89

Labor Charges	
RT Labor	339.78
OT Labor	0.00
Subtotal Labor	339.78
Subsistence	0.00
Other Expenses 10%	0.00
MU ~~20.00%~~	~~67.96~~ 33.98
Labor Total	~~407.74~~

Equipment Charges

Material Charges

Activity Total	407.74

$ 373.76

For Owner/Resident Engineer's Use Only

☐ New Bill ☐ Approved for Payment

☐ Resubmittal ☐ Returned for Correction

Date of Action:

Date Received:

Accepted:

Customer: Date:

Contractor: Date:

Bill Total + ~~407.74~~

Page 1

NTS Universal/Special Bill Form

www.swbills.com

00701

MARINA Still Growing!

Daily Extra Work Report

Billed to: R. B. Mc Associates Job No. /Contract: 314018 Cost Code #

Location: Anthony Tarina Gym Date Performed: 4/17/15 Date of Report: 5/7/15

Description of Work: Looking at Fixed exposed wires in the New Gym as being built.

QTY.	DESCRIPTION	HOURS	HOURLY RATE	EXTENDED AMOUNTS
2	Laborers (3 hrs each)	labor		
	3 hours Each			
	TOTAL COST OF LABOR			
EQUIPMENT NO.				
MATERIALS		QUANTITY	AMOUNT	
COMMENTS AREA				
	TOTAL COST OF EQUIPMENT AND MATERIALS	B		

The above record is complete and correct

Francisco Mejia
Contractor/ Representative

Mirna V
Customer's Signature

+20% on Labor Cost	(A)	
+15% on Equipment & Materials Cost	(B)	
+10% on Labor, Equipment & Materials Cost If Work Performed is by Approved Subcontractor	(C)	
SUB-TOTAL THIS REPORT		
+ 1 % on Subtotal	(D)	
TOTAL THIS REPORT		

MARINA LANDSCAPE, INC.
1900 S. Lewis Street, Anaheim, California 92805 Phone 714-939-6600 Fax: 714 935-1199
Contractor's License Number 482862 • Web Site: www.marinaco.com

White - Accounting Yellow - Field Pink - Owner/Agency

DAILY EXTRA WORK REPORT

Sub: MLI Bill: 2.0 Job: 314018 $543.65

Jefferson School District

Contractor Job: 314018 - Anthony Traina Gym Project

Work Performed By: Marina Landscape, Inc. (For RGM & ASSOCIATES)

Description of Work: Continue Working & Finding Wires In Area Where Gym Is Being Built.

Ticket No. 58962 ☒ Signed

Change Order	003
Billing Number	2.0
Report Date	6/16/2015
Perform Date	4/21/2015

Labor Charges

Craft ID		Employee Name	RT Hrs	OT Hrs	Subs Units	RT Rate	OT Rate	Subs Rate	Extended
L01	LBR LBR	L Laborer, Journeyman	8.00			56.630			453.04

Labor Charges	
RT Labor	453.04
OT Labor	0.00
Subtotal Labor	453.04
Subsistence	0.00
Other Expenses 10%	0.00
MU ~~20.00%~~	~~90.61~~ 45.30
Labor Total	543.65

Equipment Charges

Material Charges

Activity Total	543.65

498.34

For Owner/Resident Engineer's Use Only

☐ New Bill ☐ Approved for Payment

☐ Resubmittal ☐ Returned for Correction

Date of Action:

Date Received:

Accepted:

Customer: Date:

Contractor: Date:

Bill Total + ~~543.65~~

Page 1

NTS Universal/Special Bill Form

www.ewbills.com

58962

MARINA Still Growing

Daily Extra Work Report

Billed to: R. B. M & Associates Job No. /Contract: 314018 Cost Code #

Location: Anthony Irvine Gym Date Performed: 4/21/15 Date of Report: 5/7/15

Description of Work: Continue blading of finding with an area where Gym is being built.

QTY.	DESCRIPTION	HOURS	HOURLY RATE	EXTENDED AMOUNTS
1	Laborer	8 hrs		
	TOTAL COST OF LABOR			
EQUIPMENT NO.				
MATERIALS		QUANTITY	AMOUNT	
COMMENTS AREA				
	TOTAL COST OF EQUIPMENT AND MATERIALS	B		

The above record is complete and correct

Francisco Mejia
Contractor/ Representative

Marc
~~Customer's~~ Signature

+20% on Labor Cost	(A)	
+15% on Equipment & Materials Cost	(B)	
+10% on Labor, Equipment & Materials Cost If Work Performed is by Approved Subcontractor	(C)	
	SUB-TOTAL THIS REPORT	
+ 1 % on Subtotal	(D)	
	TOTAL THIS REPORT	

MARINA LANDSCAPE, INC.
1900 S. Lewis Street, Anaheim, California 92805 Phone 714-939-6600 Fax: 714 935-1199
Contractor's License Number 492882 • Web Site: www.marinaco.com

White - Accounting Yellow - Field Pink - Owner/Agency

DAILY EXTRA WORK REPORT

Sub: MLI Bill: 3.0 Job: 314018 $1,251.89

Jefferson School District

Contractor Job: 314018 - Anthony Traina Gym Project

Work Performed By: Marina Landscape, Inc. (For RGM & ASSOCIATES)

Description of Work: Tonned Wires & Checking For Continuity Back To Controllers To See If Wiers Can B

Ticket No. 58963 ☒ Signed

Change Order	003
Billing Number	3.0
Report Date	6/16/2015
Perform Date	4/22/2015

Labor Charges

	Craft ID	Employee Name	RT Hrs	OT Hrs	Subs Units	RT Rate	OT Rate	Subs Rate	Extended
L01	LBR LBR	L Laborer, Journeyman	8.00			56.630			453.04
L02	LBR LBR	L Laborer, Journeyman	8.00			56.630			453.04
L03	FTR FTR	Foreman	2.00			68.580			137.16

Labor Charges	
RT Labor	1,043.24
OT Labor	0.00
Subtotal Labor	1,043.24
Subsistence	0.00
Other Expenses	0.00
MU ~~20.00%~~ 10%	~~208.65~~ 104.32
Labor Total	1,251.89

Equipment Charges

Material Charges

Activity Total	1,251.89
	1147.56
Bill Total +	~~1,251.89~~

For Owner/Resident Engineer's Use Only

☐ New Bill ☐ Approved for Payment Date of Action:

☐ Resubmittal ☐ Returned for Correction Date Received:

Accepted:

Customer: Date:

Contractor: Date:

Page 1

NTS Universal/Special Bill Form

www.ewbills.com

58963

MARINA Still Growing!

Daily Extra Work Report

Billed to: R & M & Associates Job No. /Contract: 314018 Cost Code #

Location: Anthony Lasaine Gym Date Performed: 4/22/15 Date of Report: 5/7/15

Description of Work: Sound wires checking for continuity back to Controllers to see if wire can be used for new construction in mot.

QTY.	DESCRIPTION	HOURS	HOURLY RATE	EXTENDED AMOUNTS
2	Laborers 8 hrs each	16		
1	Foreman 2 hrs	2 hrs		
	TOTAL COST OF LABOR			
EQUIPMENT NO.				
MATERIALS		QUANTITY	AMOUNT	
COMMENTS AREA				
	TOTAL COST OF EQUIPMENT AND MATERIALS	B		

The above record is complete and correct

Francisco Mejia
Contractor/ Representative

Customer's Signature

+20% on Labor Cost	(A)	
+15% on Equipment & Materials Cost	(B)	
+10% on Labor, Equipment & Materials Cost If Work Performed is by Approved Subcontractor	(C)	
SUB-TOTAL THIS REPORT		
+ 1 % on Subtotal	(D)	
TOTAL THIS REPORT		

MARINA LANDSCAPE, INC.
1900 S. Lewis Street, Anaheim, California 92805 Phone 714-939-6600 Fax: 714 935-1199
Contractor's License Number 492862 • Web Site: www.marinaco.com

White - Accounting Yellow - Field Pink - Owner/Agency

letter

DATE: 10/20/15

TO: Jefferson School District
1219 Whispering Wind Dr.
Tracy, CA 95377

ATTN: James Bridges

RE: Anthony Traina Gym and Performance Center
DSA Appl. #: 02-113192
COR #031

Dear James,

We have reviewed the contractor's pricing on COR #031 to revise wall construction at Room C04 from a 1-hour rated to smoke partition; provide additional upright fire sprinklers in stage soffit cavity; add (8) additional upright heads above C06 per CCD #19.

We find the pricing of $5,552.00 acceptable and recommend Board of Trustee acceptance.

District Authorization: _____
James W. Bridges

Date: 10/20/15

Thank you.

FROM: Nick Morrissey
pjhm architects
Project Manager

CC: Ramon Parocua, RGM
Kenneth Podany, PJHM
File 13

pjhm·architects
OC// 24461 Ridge Route Drive #100 • Laguna Hills CA 92653 P// 949-496-6191
SD// 804 Pier View Way #103 • Oceanside CA 92054 P// 760-730-5527

CHANGE ORDER REQUEST 031

Distribution to:
- OWNER ☐
- ARCHITECT ☐
- CONST. MANAGER ☐
- CONTRACTOR ☐
- FIELD ☐
- OTHER ☐

PROJECT: Anthony Traina Gym and Performance Center
4256 Windsong Drive
Tracy, CA 95377

TO: Nick Morrissey, PJHM Architects

Reference: RFI # ____ PCO # ____ ASI# ____
CCA # ____ CCD # 19 IB# ____

COR NUMBER: 031

DATE: October 5, 2015

PROJECT No.: JES-14-01

CONTRACT FOR: New Gymnasium

CONTRACT DATE: November 1, 2014

Description of work:

Revise wall construction at room C04 from 1 hour rated to a smoke partition, provide additional upright sprinklers in stage soffit cavity and add eight additional upright heads above C06, per CCD #19.

1. Subcontractor Work (mark-up not to exceed 10%)

(Please attached all required backup, quantities, unit cost, etc., associated with work performed.)

1. Costs from Cen-Cal	$	3,281.00		
2. Costs from Starke Structures	$	1,950.66		
SUBTOTAL	$	5,231.66		
Contractor mark-up on Sub work (not to exceed 5%)	$	261.58		
		TOTAL - 1	$	5,493.24

2. Work Performed by Prime Contractor

(Please attached all required backup, quantities, unit cost, etc., associated with work performed.)

Materials	$	-		
Labor	$	-		
Equipment	$	-		
SUBTOTAL	$	-		
Prime Contractor OH&P (not to exceed 15%)	$	-		
		TOTAL - 2	$	-
		TOTAL - 1 & 2	$	5,493.24
Bond Premium (actual rate, 1.06%)			$	58.23
		TOTAL PROPOSED CHANGE	$	5,552.00

Extension of Contract Time Proposed 0 Days.

Prepared by:

Ramon Parocua

Date October 5, 2015

CEN-CAL
FIRE SYSTEMS, INC
CA LIC NO 488547 NV LIC NO 35006
•Commercial •Industrial •Residential
•Design •Installation •Service

1615 S. STOCKTON ST., LODI, CA. 95240
P.O. BOX 1284, LODI, CA. 95241-1284
OFFICE: (209) 334-9119 FAX: (209) 334-2923
Web: www.cen-calfire.com

CHANGE ORDER REQUEST

DATE: 9-10-15

JOB NUMBER 14147

C/O REQUEST # 1

JOB NAME: ANTHONY TRAINA GYM
STREET: 4256 WINDSONG DR.
CITY: TRACY, CA ZIP 95377

BILL TO: RGM & ASSOCIATES
ATTN: JEFF GILCHRIST
STREET: 3230 MONUMENT WAY
CITY: CONCORD, CA ZIP 94518
PHONE: FAX:

REFERENCE OF CHANGE: CCD A #19

DESCRIPTION: REVISIONS TO THE OVERHEAD FIRE SPRINKLER SYSTEM PIPING INDICATED ON SHEET FP-2, DELTA CCD #19

TOTAL OF CHANGE ORDER REQUEST: $3,281 00

IF YOU HAVE ANY QUESTIONS OR REQUIRE ADDITIONAL INFORMATION, PLEASE DO NOT HESITATE TO CONTACT ME IMMEDIATELY.

SINCERELY,

MIKE BOERSMA
PROJECT MANAGER

AUTHORIZATION TO PROCESS: NAME: DATE:

Cen-Cal Fire Systems,Inc.

Change Order Worksheet

DATE: 9/9/2015
JOB : ANTHONY TRAINA GYM
JOB #: 14147
DESCRIPT: CCD A #19 - REVISIONS TO THE OVERHEAD FIRE SPRINKLER SYSTEM
C.O.R. # 1

ITEM NO.	DESCRIPTION	QTY	UNIT	LAB / UNIT	TOTAL HOURS	LABOR RATE	TOTAL LABOR	MAT'L / UNIT (*)	TOTAL MAT'L	EQUIP / UNIT	TOTAL EQUIP	TOTAL
1	ADD SSU (ATTIC OR ROOF) SPRINKLER	13	EA.	1.23	15.99	$66.78	$1,068	$42.00	$546	$0.00	$0	$1,614
2	SUBSTITUTE SSP FOR SSU SPRINKLER	1	EA.	0	0	$0.00	$0	$16.25	$16	$0.00	$0	$16
3	JOURNEYMAN LABOR	0	HR.	1	0	$0.00	$0	$0.00	$0	$0.00	$0	$0
4	HELPER LABOR	12	HR.	1	12	$48.40	$581	$0.00	$0	$0.00	$0	$581
5	ADDITIONAL ENGINEERING LABOR	8	HR.	1	8	$75.00	$600	$0.00	$0	N/A	$0	$600
6					0		$0		$0		$0	$0
7					0		$0		$0		$0	$0
8					0		$0		$0		$0	$0
9					0		$0		$0		$0	$0
10					0		$0		$0		$0	$0
11					0		$0		$0		$0	$0
12					0		$0		$0		$0	$0
13					0		$0		$0		$0	$0
14					0		$0		$0		$0	$0
15					0		$0		$0		$0	$0
16					0		$0		$0		$0	$0
SUBTOTALS:					35.99		$2,249		$562		$0	$2,811

TAX @ 8.75%	$49
SUBTOTAL	$2,860
15% MATERIAL MARK-UP	$84
15% LABOR MARK-UP	$337
15% EQUIPMENT MARK-UP	$0
SUBTOTAL:	$3,281
MISCELLANEOUS	$0
TOTAL:	$3,281

* SHOP FABRICATION LABOR INCLUDED FOR THE ADD'L SSU SPRINKLERS

CEN-CAL
FIRE SYSTEMS, INC
CA LIC NO 488547 NV LIC NO 35006
•Commercial •Industrial •Residential
•Design •Installation •Service

1615 S. STOCKTON ST. LODI, CA. 95240
P.O. BOX 1284 LODI, CA. 95241-1284
OFFICE: (209) 334-9119 FAX: (209) 334-2923
Web: www.cen-calfire.com

Project Wage Rate

Date: 8-14-14

Wage Rate Calculation, Anthony Traina Gym: Fire Sprinkler Fitter (*)

Straight Time Rate	=	$33.64 per hour
Contributions:		
Health & Welfare	=	$ 8.52
Pension	=	$10.73
Vacation & Holidays	=	$ 1.60
Training	=	$ 0.45
Other	=	$ 0.25
Payroll taxes	=	$ 4.83
Liability Insurance	=	$ 2.93
Workman's Compensation Insurance	=	$ 3.83
TOTAL:		$66.78 per hour

* Project prevailing wage determination per California Industrial Relations determination for San Joaquin County (SJO-2014-2).

Starke Structures Inc.
2200 Pine View Way, Suite A
Petaluma, CA 94954

Ph # 707-765-9933
Fax # 707-765-0233
Lic #673132

Change Order #8 (revised)

Job: Anthony Traina Gym
4256 Windsong Dr.
Tracy, CA 95377

Contractor: RGM & Associates
3230 Monument Way
Concord, CA 94518

Reference: CCD#19

Description: Furring wall at drinking fountain. Relocate framing, sheathing, and posts at roof hatch.

1. Foreman	2	hours	$	90.00	hr	$180.00
2. Journeyman	15	hours	$	80.00	hr	$1,200.00
3. 2 x 6 pressure treated	6	bf	$	1.00	m/bdft	$6.00
4. 2 x 6 DF#1	114	bf	$	0.60	m/bdft	$68.40
5. Hilti Pins	4	@	$	1.00	ea	$4.00
6. 6 x 6 DF#1	96	bf	$	1.73	m/bdft	$165.60
7. LUS210-2	4	@	$	2.43	ea	$9.72
8. 5/8" plywood	0	sq.ft.	$	0.85	m/sqft	$0.00
9. Tools/Equip./ Travel	15	@	$	8	hr	$120.00

Sub Total	$1,753.72
10% OH & P	$175.37
8.5% tax on materials	$21.57
Total	$1,950.66

Additional schedule days required to perform the above work = 1

DSA 140

APPLICATION FOR APPROVAL OF CONSTRUCTION CHANGE DOCUMENT – CCD CATEGORY A

CCD Category A is for construction changes to or affecting Structural Safety, Fire & Life Safety or Accessibility.

This form shall be completed by the Design Professional in General Responsible Charge of the project, in accordance with California Code of Regulations, Title 24, Part 1, Section 4-338 (c) and in compliance with DSA IR A-6.

School District/Owner: Jefferson School District	DSA File #: 39 - 39
Project Name/School: Anthony Traina Gymnasium & Performance Center Building	DSA App. #: 02 - 113342

APPLICANT

CCD #: 19	Date Submitted: 08/31/15	Attached Pages?: ☐No ■Yes (5 pages)
Firm Name: PJHM Architects		Contact Name: Nick Morrissey
Email: nick@pjhm.com		Phone Number: (949) 496-6191
Address: 24461 Ridge Route Drive, Suite #100		
City: Laguna Hills	State: CA	Zip:92653
☐ A DSA 301-N, DSA 301-P, or 90-Day Letter has been issued for this project.		

DESIGN PROFESSIONAL IN GENERAL RESPONSIBLE CHARGE

Name of Design Professional in General Responsible Charge: Kenneth J. Podany	
Professional License #: C28889	Discipline: Architect

Design Professional in General Responsible Charge Statement: The attached Construction Change Documents have been examined by me for design intent and appear to meet the appropriate requirements of Title 24, California Code of Regulations and the project specifications. They are acceptable for incorporation into the construction of the project.

Signature: _____

DESIGN PROFESSIONAL IN GENERAL RESPONSIBLE CHARGE

CHECK THIS BOX: ☐ To confirm that all CCD drawings and calculations have been stamped and signed by the Responsible Design Professional.

Brief description of construction change (attach additional sheets if needed):

Revise wall construction around room C04 from 1 hour rated to smoke partition due to the fact that the building is fully sprinkled per CBC Table 508.2.5 per SKA-1. Provide additional upright sprinklers in soffit cavity and add eight additional upright heads above C06 due to Glu-lam beam blocking sprinkler coverage per FP-2 and SKFP-1. Alternative branch line restraint for all branch line restraints in room C01

List of DSA approved drawings affected by this CCD: A-2.0, FP-2, FP-4

DSA USE ONLY
(for paper submittal only)

SSS_____Date_____ Approved/Disapproved/Not Req'd

FLS_____Date_____ Approved/Disapproved/Not Req'd

ACS_____Date_____ Approved/Disapproved/Not Req'd

Remarks_____

For business office use only
Date Sent_____
Return By_____
Delivery Method_____

DSA Approval Stamp

APPROVED
DIV OF THE STATE ARCHITECT
SACRAMENTO REGIONAL OFFICE

AC --- F/LS KLV SS CL

APP. # 02-113342 DATE 09/03/15

DOC NAME : CCD 19

SMOKE SEALED WOOD FRAMED WALL TO THE UNDERSIDE OF CEILING. ALL PENETRATIONS AND JOINTS SHALL BE FILLED TO LIMIT THE FREE PASSAGE OF SMOKE. MECHANICAL PENETRATION SMOKE DAMPER TO REMAIN IN SCOPE

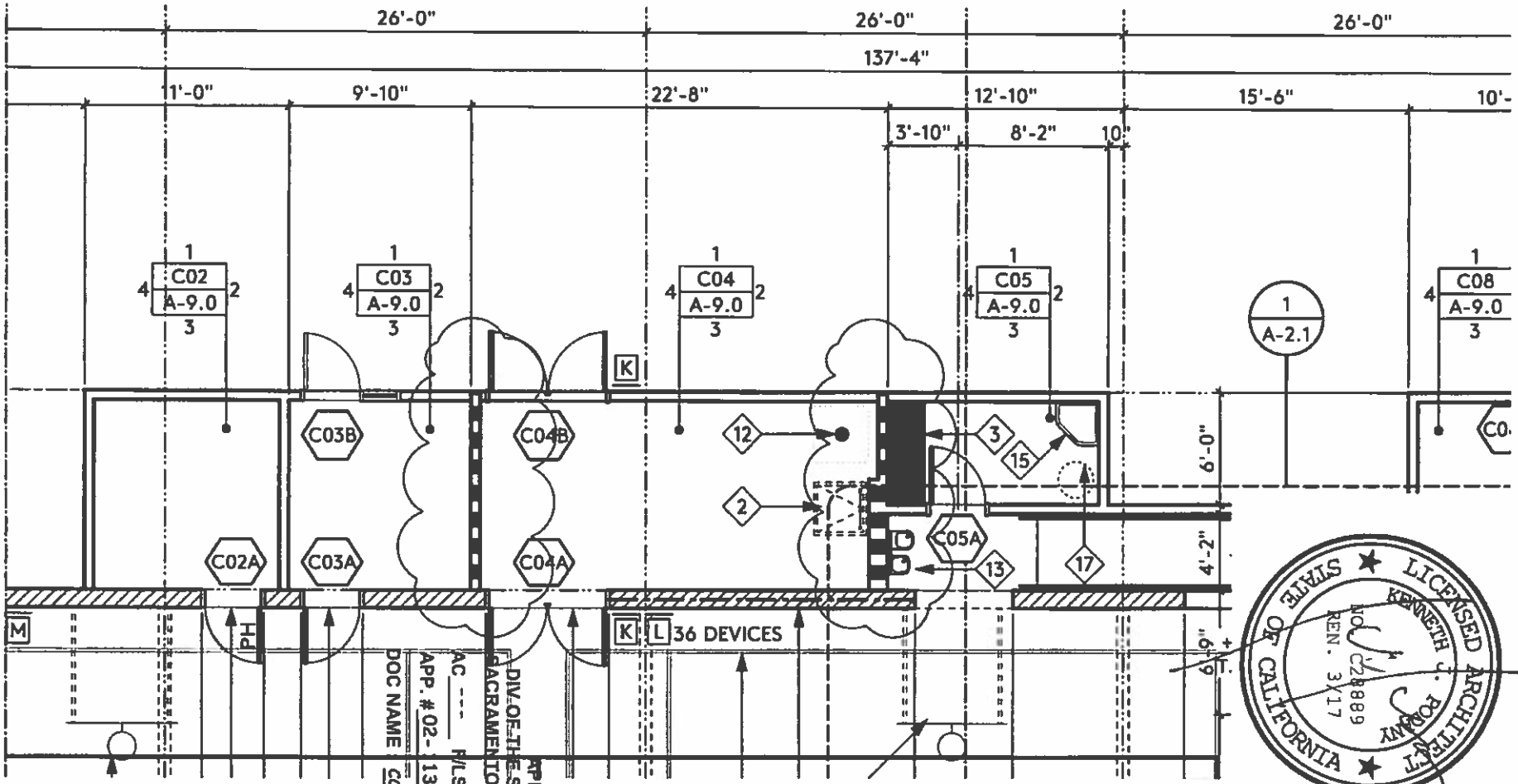

APPROVED
DIV. OF THE STATE ARCHITECT
SACRAMENTO REGIONAL OFFICE
AC ___ F/LS KLV SS CL
APP. # 02-13342 DATE 09/03/15
DOC NAME CCD 19

LICENSED ARCHITECT
KENNETH J. POSNY
No. C28889
REN. 3/17
STATE OF CALIFORNIA

FLOOR PLAN

CCD#19

SKA-1

ANTHONY TRAINA SCHOOL GYMASIUM AND PERFORMANCE CENTER BUILDING

JEFFERSON SCHOOL DISTRICT

pjhm architects

OC: 24461 Ridge Route Drive #110, Laguna Hills, CA 92653 • p: 949.496.6191 • SD: 804 Pier View Way #103, Oceanside, CA 92054 • p: 760.730.5527 • www.pjhm.com

ROOM SCHEDULE
pjhm architects
AON
ANTHONY TRAINA SCHOOL
GYMNASIUM AND
PERFORMANCE CENTER BUILDING
JEFFERSON SCHOOL DISTRICT
GYMNASIUM
FIRE SPRINKLER
PIPING PLAN
FP-2

REGISTERED PROFESSIONAL ENGINEER
QUI T DUONG
FP 1573
EXP. 6-30-17
FIRE PROTECTION
STATE OF CALIFORNIA

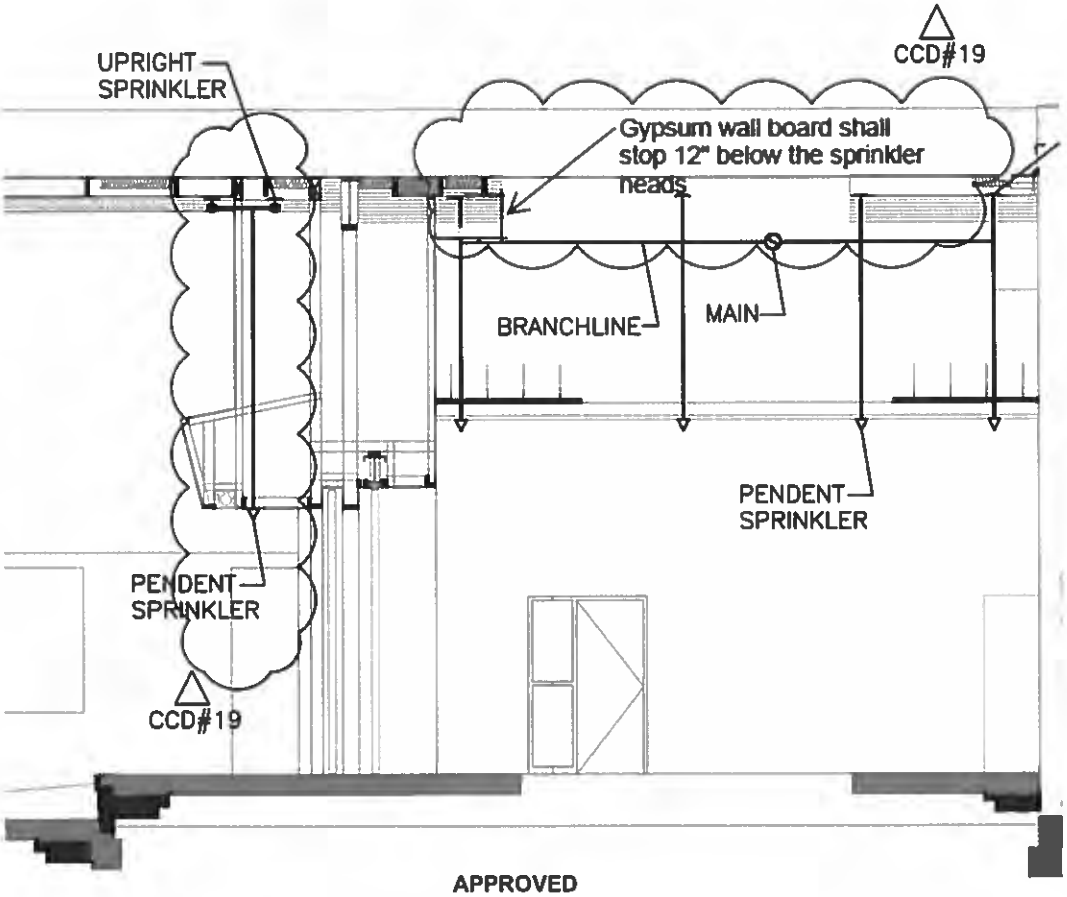

APPROVED
DIV OF THE STATE ARCHITECT
SACRAMENTO REGIONAL OFFICE
AC --- F/LS KLV SS CL
APP. # 02-113342 DATE 09/03/15
DOC NAME : CCD 19

pjhm architects

ANTHONY TRAINA SCHOOL
GYMNASIUM AND
PERFORMANCE CENTER BUILDING
JEFFERSON SCHOOL DISTRICT

DETAILS & SECTIONS

CCD-19

SKFP-1

OC: 24461 Ridge Route Drive #110, Laguna Hills, CA 92653 • p: 949.496.6191 • SD: 804 Pier View Way #103, Oceanside, CA 92054 • p: 760.730.5527 • www.pjhm.com

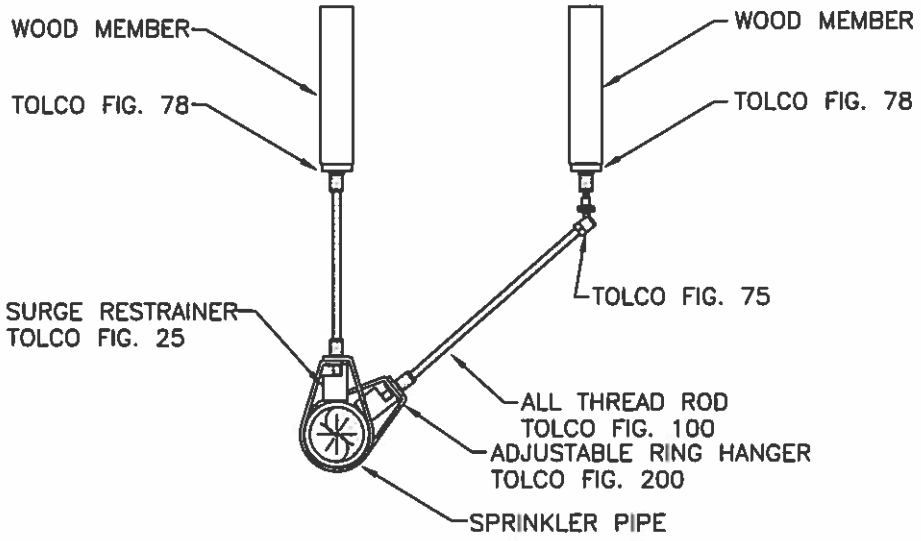

APPROVED
DIV OF THE STATE ARCHITECT
SACRAMENTO REGIONAL OFFICE

AC --- F/LS KLV SS CL

APP. # 02-113342 DATE 09/03/15

DOC NAME : CCD 19

REGISTERED PROFESSIONAL ENGINEER
WILLIAM NATHAN FLETCHER
FP 1863
EXP. 3-31-17
FIRE PROTECTION
STATE OF CALIFORNIA

AON

Fire Protection Engineering
Aon Fire Protection Engineering Corporation
11770 Bernardo Plaza Court | Suite 110 | San Diego, CA 92128
| +1 858 673 5646 | f +1 858 673 5649 | www.aonfpe.com
Fire Protection | Code | Risk & Life Safety | Security
Project # 2013043-000

Title:
BRANCH LINE RESTRAINT

Project Name:
Jefferson School

Date
06/29/2015

Scale
NTS

Drawing Number
FP-5.1SK

Fig. 75 - Swivel Attachment

c UL us LISTED

Size Range — 3/8" Rod Attachment
Material — Carbon Steel
Function — There are three recommended applications for this product: May be used as a Branch Line Restraint for structural attachment to anchor bolt, beam clamp, etc. May be used in a pitched or sloped roof application, to meet requirements of NFPA 13 (2002) Sec 9.1.2.5. May be used as an upper attachment with short hanger rod to omit seismic bracing (per UBC97).
Approvals — Underwriters' Laboratories Listed in the USA **(UL)** and Canada **(cUL)** to support up to 4" pipe. Meets requirements of Uniform Building Code (UBC) 1997 Table O, Section 3.B.
Finish — Electro-Galvanized
Order By — Figure number

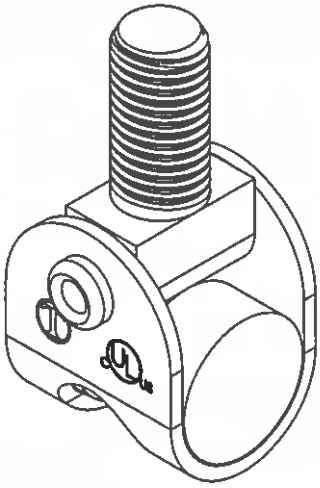

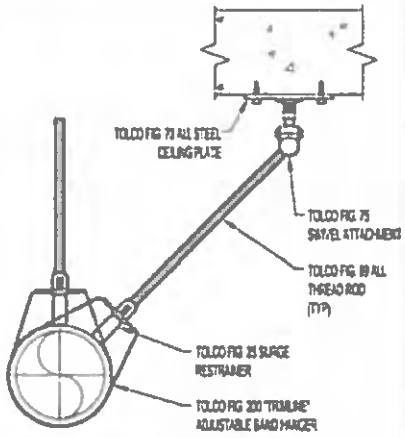

May be used as a structural attachment component of a branch line restraint

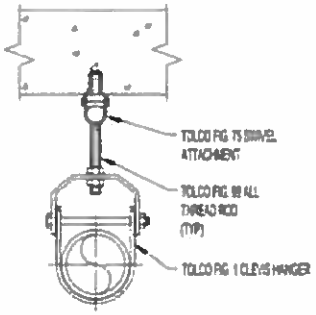

May be used as an upper attachment with short hanger rod to omit seismic bracing (per UBC97).

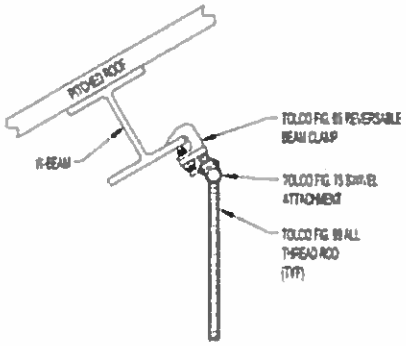

May be used with a pitched roof application, to meet requirements of NFPA 13 (2002) Sec 9.1.2.5.

Fig. 78 - All Steel Ceiling Plate

Size Range — 3/8" rod
Material — Carbon Steel
Features — Attachment to wood beams, ceilings, metal decks or walls. Can also be welded to steel beams.
Approvals — Underwriters' Laboratories Listed in the USA **(UL)** and Canada **(cUL)**. Additionally, **(UL)** has listed the Fig. 78 with fasteners as shown in the table below.
Finish — Plain
Note — Available in Electro-Galvanized and HDG finish.
Order By — Figure number, rod size and finish

Patent #5,702,077

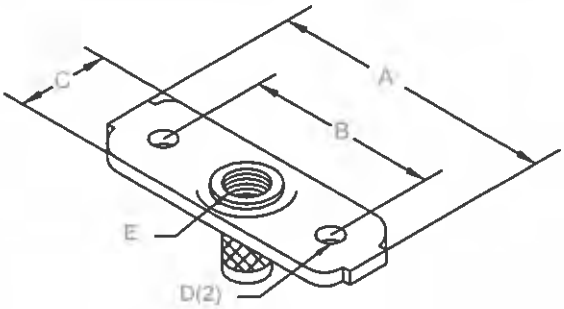

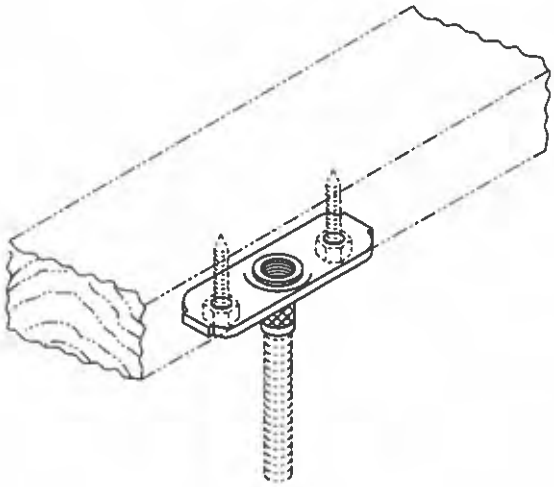

UL Listed Fastener Table

Pipe Size	Qty	Fastener Type	Material
1/2 - 2	2	#14 x 1¼ A-point hex-washer-head sheet metal screw	Wood
2½ - 4	2	1/4 x 1½ wood screws*	Wood
1/2 - 2	2	1/4 x 1 tek screws	Metal (18 gauge)
1/2 - 2	2	#14 x 1¼ A-point hex-washer-head sheet metal screw	Wood
1/2 - 2	2	#14 x 2 A-point-hex-washer-head sheet metal screw	Wood thru 5/8" gyp board

* No pre-drilling

Dimensions • Weights

Pipe Size	A	B	C	D	E	Max. Rec. Load Lbs.*	Approx. Wt./100
1/2 - 2	3	2⅛	1⅛	5/16	3/8	150	15
5 - 6	Consult factory for data						

* Minimum safety factor of 5

OFFICE/MANUFACTURING FACILITY • 1375 SAMPSON AVE • CORONA, CA 92879 • PH: 951 737 5599 • FAX: 951 737 0330
CUSTOMER SERVICE • 800.786.5266
www.tolco.com

letter

DATE: 10/20/15

TO: Jefferson School District
1219 Whispering Wind Dr.
Tracy, CA 95377

ATTN: James Bridges

RE: Anthony Traina Gym and Performance Center
DSA Appl. #: 02-113192
COR #032r

Dear James,

We have reviewed the contractor's pricing on COR #032r to furnish and install 4x12 pad blocks at straps for simpson hangers per CCD #25 (6 locations).

We find the pricing of $2,132.00 acceptable and recommend Board of Trustee acceptance.

District Authorization: _____
James W. Bridges

Date: 10/20/15

Thank you.

FROM: Nick Morrissey
pjhm architects
Project Manager

CC: Ramon Parocua, RGM
Kenneth Podany, PJHM
File 13

pjhm·architects
OC: 24461 Ridge Route Drive #100 • Laguna Hills CA 92653 P: 949-496-6191
SD: 804 Pier View Way #103 • Oceanside CA 92054 P: 760-730-5527

CHANGE ORDER REQUEST 032r

Distribution to:
- OWNER ☐
- ARCHITECT ☐
- CONST. MANAGER ☐
- CONTRACTOR ☐
- FIELD ☐
- OTHER ☐

PROJECT: Anthony Traina Gym and Performance Center
4256 Windsong Drive
Tracy, CA 95377

TO: Nick Morrissey, PJHM Architects

Reference: RFI # ____ PCO # _____ ASI# _____
CCA # _____ CCD # 25 IB# _____

COR NUMBER: 032r

DATE: October 7, 2015

PROJECT No.: JES-14-01

CONTRACT FOR: New Gymnasium

CONTRACT DATE: November 1, 2014

Description of work:
Furnish and install 4X12 pad blocks at straps for simpson hangers at 6 locations per CCD 25.

1. Subcontractor Work (mark-up not to exceed 10%)
(Please attached all required backup, quantities, unit cost, etc., associated with work performed.)

1. Costs from Starke Structures	$ 2,009.00	
SUBTOTAL	$ 2,009.00	
Contractor mark-up on Sub work (not to exceed 5%)	$ 100.45	
TOTAL - 1		$ 2,109.45

2. Work Performed by Prime Contractor
(Please attached all required backup, quantities, unit cost, etc., associated with work performed.)

Materials	$ -	
Labor	$ -	
Equipment	$ -	
SUBTOTAL	$ -	
Prime Contractor OH&P (not to exceed 15%)	$ -	
TOTAL - 2		$ -
TOTAL - 1 & 2		$ 2,109.45
Bond Premium (actual rate, 1.06%)		$ 22.36
TOTAL PROPOSED CHANGE		**$ 2,132.00**

Extension of Contract Time Proposed 2 Days.

Prepared by:
Ramon Parocua

Date October 7, 2015

Ramon Parocua

From: Ramon Parocua
Sent: Wednesday, October 14, 2015 3:43 PM
To: Ramon Parocua
Subject: FW: Starke CO #9

From: Matt Mullis [mailto:mmullis@sonic.net]
Sent: Wednesday, October 14, 2015 10:48 AM
To: Jeff Gilchrist
Subject: RE: Starke CO #9

Jeff,
It was 9 locations originally, I updated price is $2,009 which is the original price divided by nine then multiplied by 6.

Thanks,

Matthew D. Mullis
Starke Structures Inc.
2200 Pine View Way, Ste. A
Petaluma, CA 94954
707-765-9933 ph
707-765-0233 fx
707-333-5371 cell

From: Jeff Gilchrist [mailto:Jeff@rgmassociates.com]
Sent: Wednesday, October 14, 2015 10:25 AM
To: mattmullis@starkestructures.com; Marc Hunter; Ramon Parocua
Subject: Starke CO #9

Matt,

Can you revise your pricing for your CO #9. You only had to pad the glu-lams at 6 location instead of the 12 that was originally thought.

Jeff

Jeffrey J. Gilchrist

RGM and Associates Inc.
3230 Mounument Way
Concord, CA 94518

Starke Structures Inc.
2200 Pine View Way, Suite A
Petaluma, CA 94954

Ph # 707-765-9933
Fax # 707-765-0233
Lic #673132

Change Order #9

Job: Anthony Traina Gym
4256 Windsong Dr.
Tracy, CA 95377

Contractor: RGM & Associates
3230 Monument Way
Concord, CA 94518

Reference: CCD#25

Description: Pad straps at glulams for attachement of top flange hangers

1. Foreman	4	hours	$	90.00	hr	$360.00
2. Journeyman	18	hours	$	80.00	hr	$1,440.00
3. SDWS22800	150	@	$	1.00	ea	$150.00
4. 4 x 12 DF#1	288	bf	$	1.25	m/bdft	$360.00
5. 1/4" masonite	12	@	$	17.00	ea	$204.00
6. #8 x 2 1/2" screws	5	lbs	$	5.00	lb	$25.00
7. Tools/Equip./ Travel	18	@	$	8	hr	$144.00

Sub Total	$2,683.00
10% OH & P	$268.30
8.5% tax on materials	$62.82
Total	$3,014.12

Additional schedule days required to perform the above work = 2

4

DSA 140

APPLICATION FOR APPROVAL OF CONSTRUCTION CHANGE DOCUMENT – CCD CATEGORY A

CCD Category A is for construction changes to or affecting Structural Safety, Fire & Life Safety or Accessibility.

This form shall be completed by the Design Professional in General Responsible Charge of the project, in accordance with California Code of Regulations, Title 24, Part 1, Section 4-338 (c) and in compliance with DSA IR A-6.

School District/Owner: Jefferson School District	DSA File #: 39 - 39
Project Name/School: Anthony Traina Gymnasium & Performance Center Building	DSA App. #: 02 - 113342

APPLICANT

CCD #: 25	Date Submitted: 09/24/15	Attached Pages?: ☐No ■Yes (5 pages)
Firm Name: PJHM Architects		Contact Name: Nick Morrissey
Email: nick@pjhm.com		Phone Number: (949) 496-6191
Address: 24461 Ridge Route Drive, Suite #100		
City: Laguna Hills	State: CA	Zip:92653
☐ A DSA 301-N, DSA 301-P, or 90-Day Letter has been issued for this project.		

DESIGN PROFESSIONAL IN GENERAL RESPONSIBLE CHARGE

Name of Design Professional in General Responsible Charge: Kenneth J. Podany	
Professional License #: C28889	Discipline: Architect

Design Professional in General Responsible Charge Statement: The attached Construction Change Documents have been examined by me for design intent and appear to meet the appropriate requirements of Title 24, California Code of Regulations and the project specifications. They are acceptable for incorporation into the construction of the project.

Signature: _____

DESIGN PROFESSIONAL IN GENERAL RESPONSIBLE CHARGE

CHECK THIS BOX: ☐ To confirm that all CCD drawings and calculations have been stamped and signed by the Responsible Design Professional.

Brief description of construction change (attach additional sheets if needed):

Add 4x12 pad blocks at straps for hangers.

List of DSA approved drawings affected by this CCD: S3.1 & 8/S5.3

DSA USE ONLY
(for paper submittal only)

SSS_____ Date_____ Approved/Disapproved/Not Req'd

FLS_____ Date_____ Approved/Disapproved/Not Req'd

ACS_____ Date_____ Approved/Disapproved/Not Req'd

Remarks_____

For business office use only
Date Sent_____
Return By_____
Delivery Method_____

DSA Approval Stamp

APPROVED
DIV OF THE STATE ARCHITECT
SACRAMENTO REGIONAL OFFICE

AC --- F/LS --- SS JS

APP. #02-113342 DATE 09/25/15

DOC NAME : CCD 25

STB STRUCTURAL ENGINEERS, INC.

PROJECT: TRAINA GYM
CLIENT: PJHM STB JOB NO. 2013-091
BY: MB DATE: 9/21/15 SHEET NO. SK-1 OF 1

CCD No 025

CHANGE RFI 125

ADD 4x12 'PAD' BLOCKS @ STRAPS FOR HANGERS @ 8/SS.3

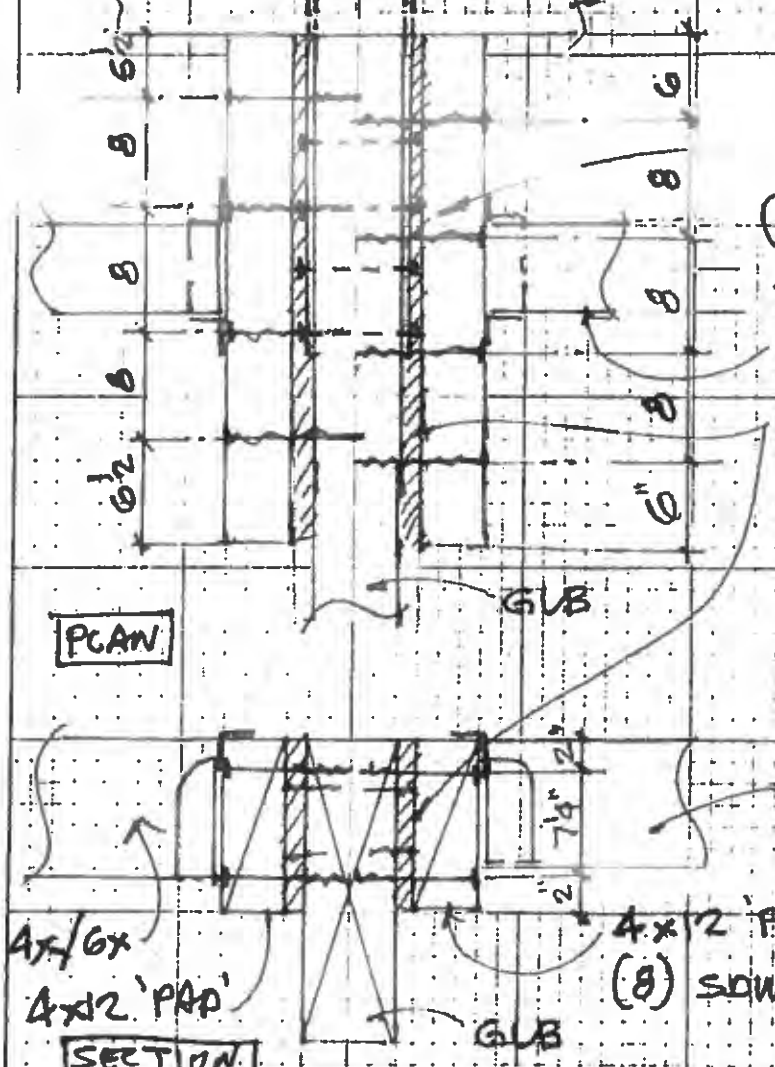

APPROVED
DIV OF THE STATE ARCHITECT
SACRAMENTO REGIONAL OFFICE
AC --- F/LS --- SS JS
APP. # 02-113342 DATE 09/25/15
DOC NAME: CCD 25

REGISTERED STRUCTURAL ENGINEER WILLIAM R. BLOOM No. 2279 Exp. 12/31/15 STATE OF CALIFORNIA

JOB: TRAINA GYM
DSA No 02-113342
CCD No 025
DATE: 09/21/15

DATE
REVIEWED BY

THESE CALCULATIONS CONTAIN INFORMATION PROPRIETARY TO STB STRUCTURAL ENGINEERS, INC. THIS DOCUMENT OR ITS CONTENTS MAY NOT BE REPRODUCED OR DISCLOSED TO OTHERS WITHOUT THE PRIOR WRITTEN CONSENT OF STB STRUCTURAL ENGINEERS, INC. © 2015 ALL RIGHTS RESERVED

STB STRUCTURAL ENGINEERS, INC

PROJECT: TRAWA Gym
CLIENT: RJHM
STB JOB NO. 13-091
BY: WB DATE: 9/21/15 SHEET NO. 1 OF 1

CCD NO 025 / RFI 125

R 6x10 = 2713 D+Lr (DWG CALC A13)

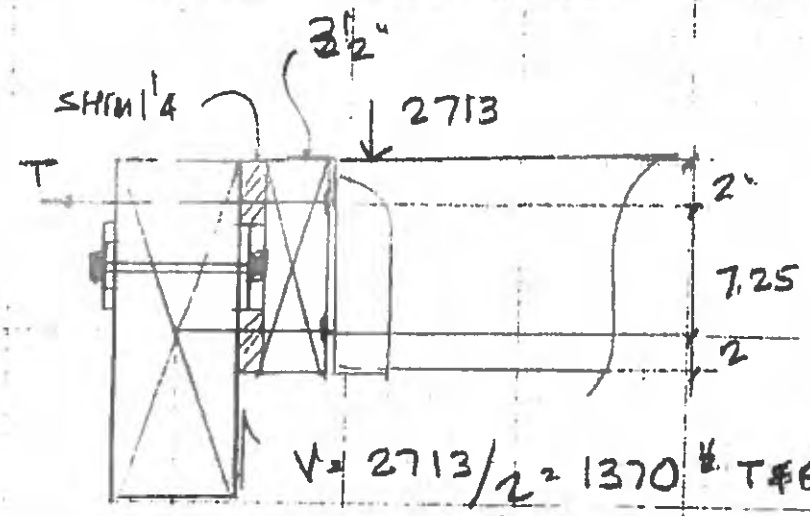

V = 2713/2 = 1370 # T&B.

T = 2713 (3.5 + 1.25) / 9.25 = 1390 # T

R = √(V² + T²) = 1950 #

arctan 1370/1390 = α = 45°

(4) SDW2 22800 DB SCR BTS. = 510 x 4 = 2040 > R

V = 395 #

T = 154 x 2.75" = 424
NDS 2012
T-11-2B

IAPMO ES-192
TABLE 5 - SIDE MEMBER 6" ≥ (3.5 + 1.25 = 4.75")
" 7 - ALLOW T = 214 #/IN. OK > 154

$Z'_\alpha = \left[\frac{395 \times 424}{395 \cos^2 45 + 424 \sin^2 45}\right] C_1$

= [410] 1.25 = 510

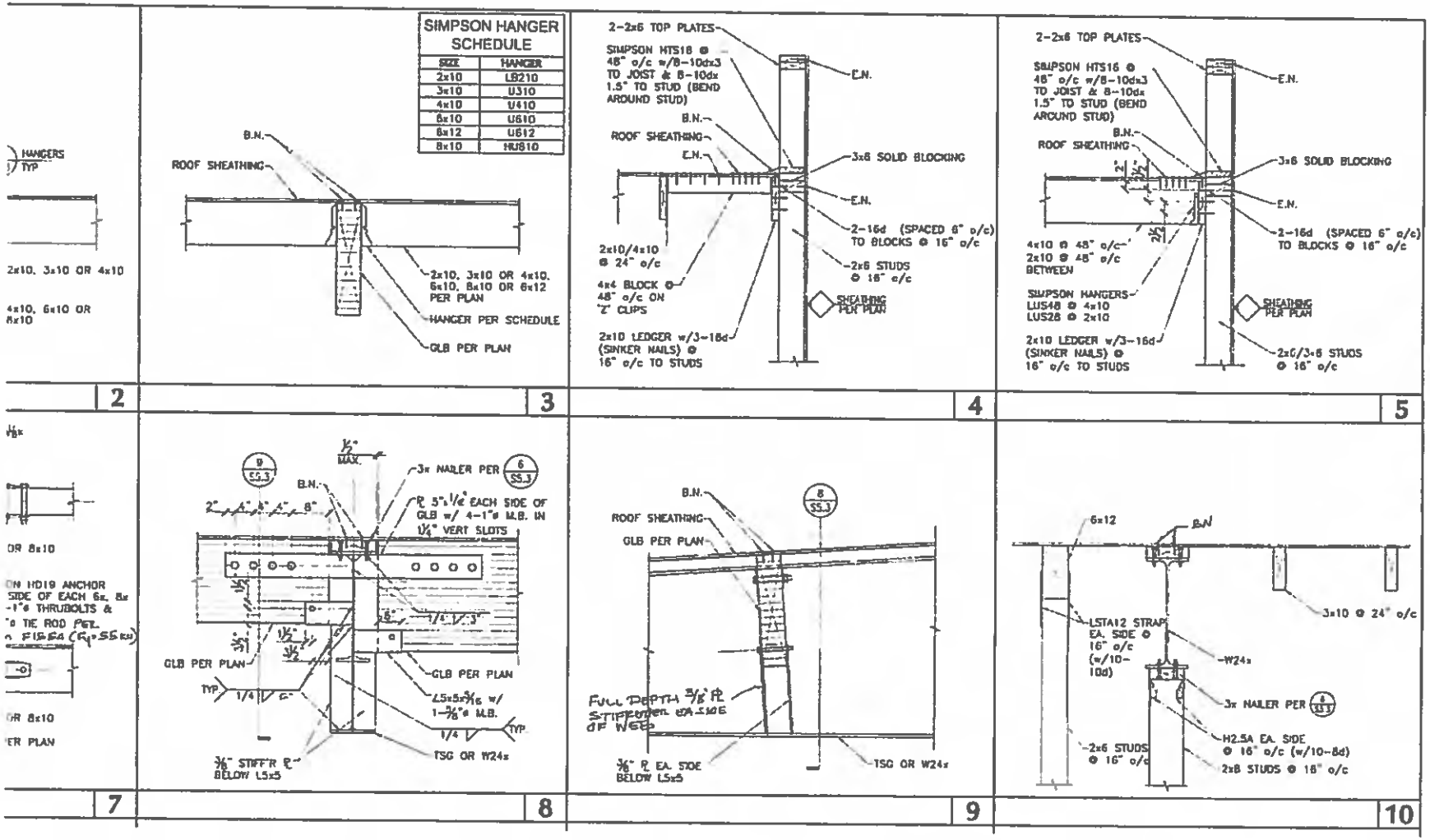

pjhm architects

JUNE 27, 2014

A# 02-113342

DATE 7/2/2014

INFORMATION ONLY

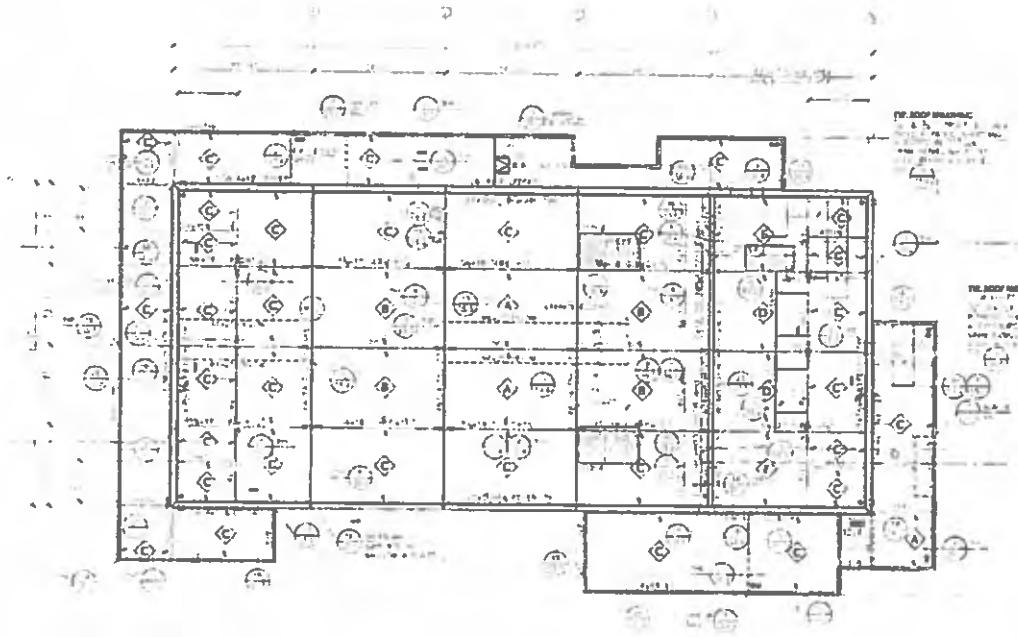

1 ROOF FRAMING PLAN

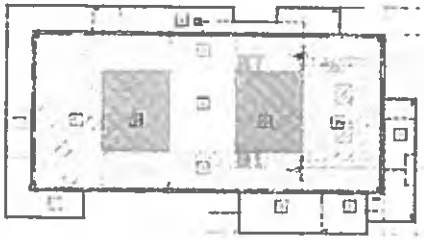

2 ROOF SHEATHING NAILING PLAN

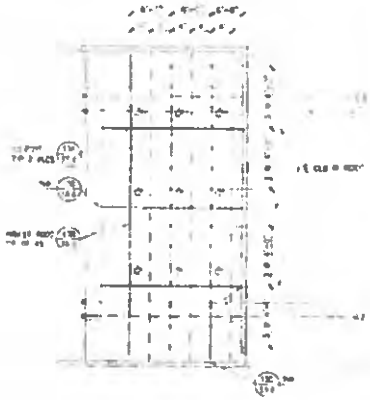

3 PIPE GRID AT STAGE AREA

ROOF FRAMING NOTES:

FRAMING LEGEND:

SHEATHING LEGEND:

INFORMATION ONLY

pjhm architects

ANTHONY TRAINA SCHOOL
GYMNASIUM AND
PERFORMANCE CENTER BUILDING
JEFFERSON SCHOOL DISTRICT

ROOF FRAMING PLAN

S3.1

INFORMATION ONLY

POST BID REQUEST FOR INFORMATION

RGM and ASSOCIATES

CONSTRUCTION MANAGERS

CONTRACTORS

BUILDERS

RFI #: 125

Description: Hangars in Conflict with Straps

To: PJHM **E-mail To:** nick@pjhm.com
Attention: Nick Morrissey

Project: Anthony Traina New Gym & Performance Center
Jefferson School District

Subcontractor: Starke Structures

Date Submitted: 9/21/15 **Priority:** Urgent ☒ Important ☐ Routine ☐
Date Needed: 9/23/15 **Specification/Plan:** Dtl. 8/S5.3

Question: The 6x12 nearest the wide flange beam located on Grid line C lands on the strap detailed in detail 8/S5.3. The Simpson hangar for the 6x12 does not allow gaps behind hangar. This condition also happens @ West side of truss on Grid line F with the 4x panel edges. **Our carpentry subcontractor has proposed a solution. Please see attachment drawing for further information.**

Possible Cost impact ☒ Possible Time impact ☒

Response:

See CCD No 025 for solution of "Pad" Blocks at the straps.
This is pending DSA approval.
Bill Bloom, STB, 09-21-2015

Response By:

Date Answered:

RGM and ASSOCIATES
3230 Monument Way
Concord, CA 94518

CSL# 509513

letter

DATE: 10/27/15

TO: Jefferson School District
1219 Whispering Wind Dr.
Tracy, CA 95377

ATTN: James Bridges

RE: Anthony Traina Gym and Performance Center
DSA Appl. #: 02-113192
COR #033

Dear James,

We have reviewed the contractor's pricing on COR #033 to head-out framing members in conflict with HD's at 12 locations where the 8x and 6x beams intersect with glu-lam beams.

We find the pricing of $2,297.00 acceptable and recommend Board of Trustee acceptance.

District Authorization: _____
James W. Bridges

Date: 11/3/15

Thank you.

FROM: Nick Morrissey
pjhm architects
Project Manager

CC: Ramon Parocua, RGM
Kenneth Podany, PJHM
File 13

pjhm·architects
OC// 24461 Ridge Route Drive #100 • Laguna Hills CA 92653 P// 949-496-6191
SD// 804 Pier View Way #103 • Oceanside CA 92054 P// 760-730-5527

CHANGE ORDER REQUEST 033

Distribution to:
- OWNER ☐
- ARCHITECT ☐
- CONST. MANAGER ☐
- CONTRACTOR ☐
- FIELD ☐
- OTHER ☐

PROJECT: Anthony Traina Gym and Performance Center
4256 Windsong Drive
Tracy, CA 95377

TO: Nick Morrissey, PJHM Architects

Reference: RFI # ____ PCO # ____ ASI# ____
CCA # ____ CCD # 26 IB# ____

COR NUMBER: 033

DATE: October 7, 2015

PROJECT No.: JES-14-01

CONTRACT FOR: New Gymnasium

CONTRACT DATE: November 1, 2014

Description of work:
Head-out framing members in conflict with the HD19's at 12 locations where the 8x and 6x beams intersect with the glu-lam beams per CCD 26.

1. Subcontractor Work (mark-up not to exceed 10%)
(Please attached all required backup, quantities, unit cost, etc., associated with work performed.)

1. Costs from Starke Structures	$ 2,163.88		
SUBTOTAL	$ 2,163.88		
Contractor mark-up on Sub work (not to exceed 5%)	$ 108.19		
	TOTAL - 1	$	2,272.07

2. Work Performed by Prime Contractor
(Please attached all required backup, quantities, unit cost, etc., associated with work performed.)

Materials	$ -		
Labor	$ -		
Equipment	$ -		
SUBTOTAL	$ -		
Prime Contractor OH&P (not to exceed 15%)	$ -		
	TOTAL - 2	$	-
	TOTAL - 1 & 2	$	2,272.07
Bond Premium (actual rate, 1.06%)		$	24.08
	TOTAL PROPOSED CHANGE	**$**	**2,297.00**

Extension of Contract Time Proposed 3 Days.

Prepared by:
Ramon Parocua

Date October 7, 2015

Starke Structures Inc.
2200 Pine View Way, Suite A
Petaluma, CA 94954

Ph # 707-765-9933
Fax # 707-765-0233
Lic #673132

Change Order #10

Job: Anthony Traina Gym
4256 Windsong Dr.
Tracy, CA 95377

Contractor: RGM & Associates
3230 Monument Way
Concord, CA 94518

Reference: CCD#26

Description: Head out joists to avoid HD19's (12 locations)

1. Foreman	2	hours	$	90.00	hr	$180.00
2. Journeyman	12	hours	$	80.00	hr	$960.00
3. U210-2	36	@	$	3.94	ea	$141.84
4. 2 x 10 DF#1	400	bf	$	0.75	m/bdft	$300.00
5. WNP210-2	12	@	$	19.74	ea	$236.88
6. Tools/Equip./ Travel	12	hours	$	8	hr	$96.00

Sub Total	$1,914.72
10% OH & P	$191.47
8.5% tax on materials	$57.69
Total	$2,163.88

Additional schedule days required to perform the above work = 2

DSA 140

APPLICATION FOR APPROVAL OF CONSTRUCTION CHANGE DOCUMENT – CCD CATEGORY A

CCD Category A is for construction changes to or affecting Structural Safety, Fire & Life Safety or Accessibility.

This form shall be completed by the Design Professional in General Responsible Charge of the project, in accordance with California Code of Regulations, Title 24, Part 1, Section 4-338 (c) and in compliance with DSA IR A-6.

School District/Owner: Jefferson School District	DSA File #: 39 - 39
Project Name/School: Anthony Traina Gymnasium & Performance Center Building	DSA App. #: 02 - 113342

APPLICANT

CCD #: 26	Date Submitted: 09/24/15	Attached Pages?: ☐No ☒Yes (4 pages)
Firm Name: PJHM Architects		Contact Name: Nick Morrissey
Email: nick@pjhm.com		Phone Number: (949) 496-6191
Address: 24461 Ridge Route Drive, Suite #100		
City: Laguna Hills	State: CA	Zip:92653

☐ A DSA 301-N, DSA 301-P, or 90-Day Letter has been issued for this project.

DESIGN PROFESSIONAL IN GENERAL RESPONSIBLE CHARGE

Name of Design Professional in General Responsible Charge: Kenneth J. Podany	
Professional License #: C28889	Discipline: Architect

Design Professional in General Responsible Charge Statement: The attached Construction Change Documents have been examined by me for design intent and appear to meet the appropriate requirements of Title 24, California Code of Regulations and the project specifications. They are acceptable for incorporation into the construction of the project.

Signature: _____

DESIGN PROFESSIONAL IN GENERAL RESPONSIBLE CHARGE

CHECK THIS BOX: ☐ To confirm that all CCD drawings and calculations have been stamped and signed by the Responsible Design Professional

Brief description of construction change (attach additional sheets if needed):

Revise 4" weld on both sides of splice plates to an 8" weld on one side of the plate. Where joists conflicts with HDs, its is structurally acceptable to head out the framing member per attached sketch

List of DSA approved drawings affected by this CCD: 4/S-5.4 and 7/S-5.3

DSA USE ONLY
(for paper submittal only)

SSS_____ Date_____ Approved/Disapproved/Not Req'd

FLS_____ Date_____ Approved/Disapproved/Not Req'd

ACS_____ Date_____ Approved/Disapproved/Not Req'd

Remarks_____

For business office use only
Date Sent_____
Return By_____
Delivery Method_____

DSA Approval Stamp
APPROVED
DIV OF THE STATE ARCHITECT
SACRAMENTO REGIONAL OFFICE

AC --- F/LS --- SS JS

APP. # 02-113342 DATE 09/29/15

DOC NAME : CCD 26

POST BID REQUEST FOR INFORMATION

RGM and ASSOCIATES

CONSTRUCTION MANAGERS

CONTRACTORS

BUILDERS

RFI #: 115

Description: Splice Plates at TSG

To: PJHM
Attention: Nick Morrissey
E-mail To: nick@pjhm.com

Project: Anthony Traina New Gym & Performance Center
Jefferson School District

Subcontractor: Davison Iron

Date Submitted: 9/9/15
Date Needed: 9/16/15

Priority: Urgent ☐ Important ☒ Routine ☐
Specification/Plan: S5.4/Dtl. 4

Question: On Sheet S5.4/Detail 4 calls out for a 4" weld on both sides of splice plates at the TSG. Our subcontractor cannot access the back of the plate at the CMU to make the weld. What actions shall we take to rectify this condition, if any is needed?

Possible Cost impact ☐

Possible Time impact ☐

Response:

8" of weld to the TSG on one side of the plate is Structurally Acceptable.
Bill Bloom, STB, 09-09-2015

Response By:

Date Answered:

RGM and ASSOCIATES
3230 Monument Way
Concord, CA 94518

CSL# 509513

POST BID REQUEST FOR INFORMATION

RGM and ASSOCIATES

CONSTRUCTION MANAGERS

CONTRACTORS

BUILDERS

RFI #: 118

Description: HD Conflict with Joists

To: PJHM
Attention: Nick Morrissey
E-mail To: nick@pjhm.com

Project: Anthony Traina New Gym & Performance Center
Jefferson School District

Subcontractor: Starke Structures

Date Submitted: 9/16/15
Date Needed: 9/18/15

Priority: Urgent ☒ Important ☐ Routine ☐
Specification/Plan: S3.1 & Dtl. 7/S5.3

Question: Detail 7/S5.3 calls for HD 19's at the 8x and 6x beams that intersect with the glu-lams at each end of the building. The HD 19's are 26" in length and the joist spacing is 24" o.c. which is where there is a conflict. *A possible solution is to head out the framing members that have this conflict. Please see the sketch that is attached to this RFI for further clarification.*

Possible Cost impact ☒

Possible Time impact ☒

Response:

Structurally Acceptable.
Bill Bloom, STB, 09-16-2015

Response By:

Date Answered:

RGM and ASSOCIATES
3230 Monument Way
Concord, CA 94518

CSL# 509513

Starke Structures, Inc.
2200 Pine View Way, Suite A
Petaluma, Ca. 94954

Ph # 707 765-9933
Fx # 707 765-0233
Lic # 673132

Request for Information #12

To: RGM & Associates
Job: Anthony Traina School

Date: 9/15/2015
Cost Impact: Probable
Schedule Impact: Unknown

HD's conflict with framing members

Location: S3.1 & 7 / S5.3

Detail 7/S5.3 calls for HD19's at the 8x & 6x beams that intersect the glulams at each end of the building. These HD's are 26" long and the joist spacing is 24"oc which presents a conflict. We believe the most cost effect solution to this problem would be to head out the framing member in conflict. See attached sketch

Please Advise

Structurally Acceptable.
Bill Bloom, STB, 09-16-15

Thanks,

Matt Mullis

The HD's in detail 7/S5.3 have an overall length of 26". The framing is spaced at 24" oc. These HD's will interfere with the framing members. Our suggestion is to head out 1 joist where it conflicts with HD.

"Proposed Solution"

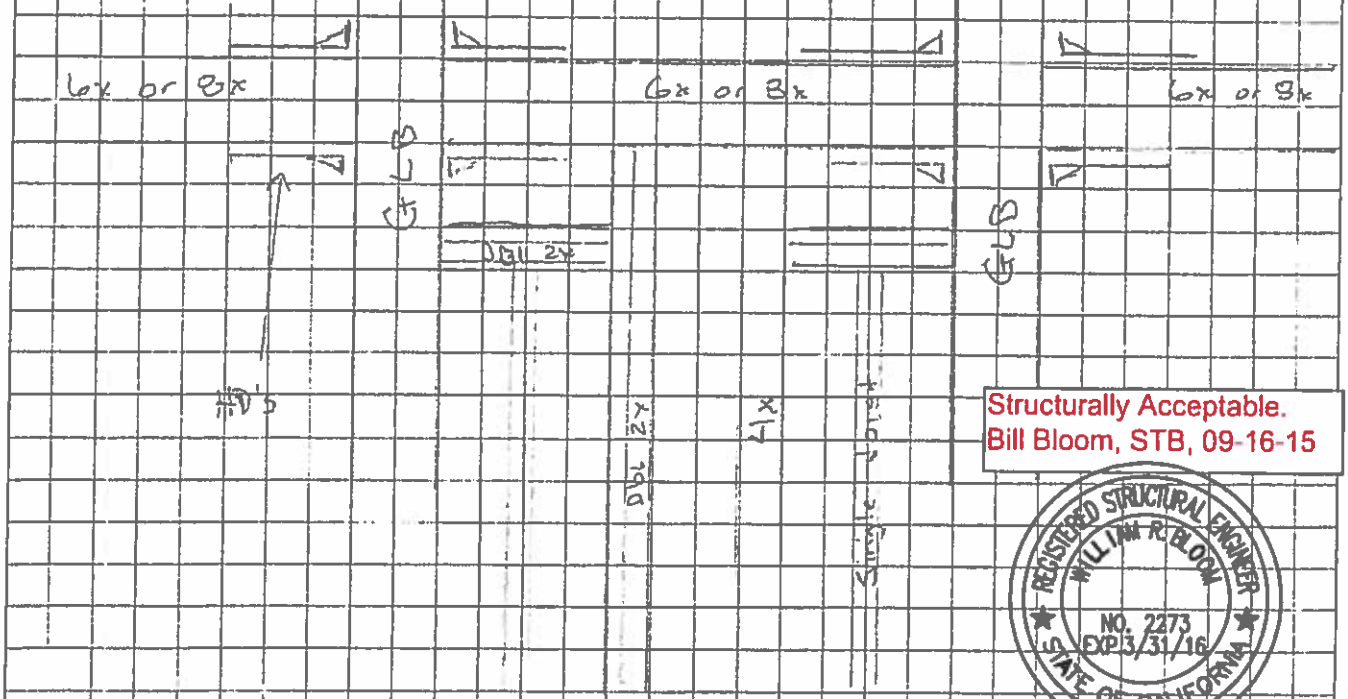

Structurally Acceptable.
Bill Bloom, STB, 09-16-15

REGISTERED STRUCTURAL ENGINEER
WILLIAM R. BLOOM
NO. 2273
EXP 3/31/16
STATE OF CALIFORNIA

* This happens at both ends of the building where framing changes direction

Starke Structures Inc.
2200 Pine View Way, Suite A • Petaluma, CA 94954
Phone: 707-766-9933 • Fax: 707-765-0233

DESCRIPTION: HD conflict with joists	
PROJECT: Traina Gym	
SCALE: NTS	SHT.
DATE: 9-15-15	of

STB STRUCTURAL ENGINEERS, INC

PROJECT: TRAINA GYM
CLIENT: PJHM STB JOB NO. 2013-091
BY: WB DATE: 9/28/15 SHEET NO. SK-1 OF 1

CCD No 026

CHANGE

① (RFI No 115) REVISE 4" OF WELD [4/SS.4] ON BOTH SIDES OF PLATE TO 8" ON 1 SIDE OF PL.

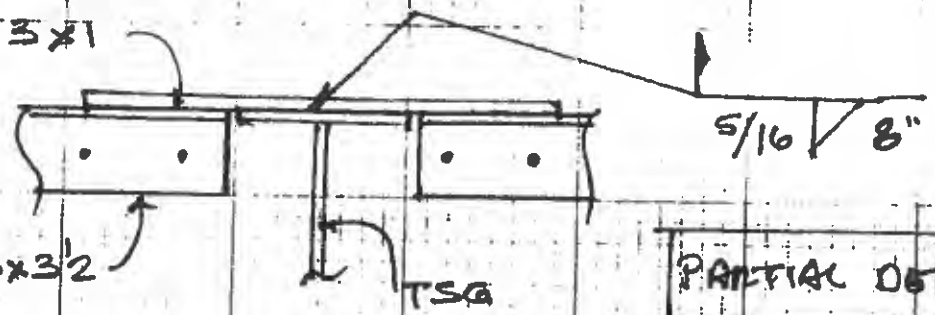

PARTIAL DETAIL 4/SS.4

② (RFI No 118) STRUCTURALLY ACCEPTABLE TO "HEAD OUT" FRAMING @ HD19 TIES PER 7/SS.3.

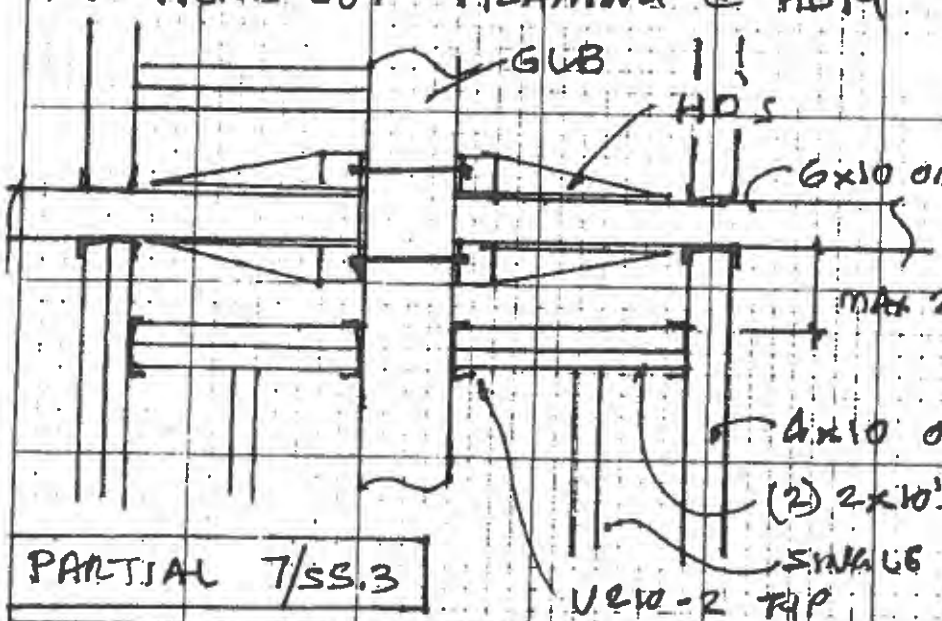

PARTIAL 7/SS.3

APPROVED
DIV OF THE STATE ARCHITECT
SACRAMENTO REGIONAL OFFICE
AC --- FLS --- SS JS
APP. # 02-113342 DATE 09/29/15
DOC NAME : CCD 26

REGISTERED STRUCTURAL ENGINEER WILLIAM R. BLOOM No. 2279 Exp. 12/31/16 STATE OF CALIFORNIA

JOB: TRAINA GYM
DSA No. 02-113342
CCD No 026
DATE: 09-28-2015

THESE CALCULATIONS CONTAIN INFORMATION PROPRIETARY TO STB STRUCTURAL ENGINEERS, INC. THIS DOCUMENT OR ITS CONTENTS MAY NOT BE REPRODUCED OR DISCLOSED TO OTHERS WITHOUT THE PRIOR WRITTEN CONSENT OF STB STRUCTURAL ENGINEERS, INC. © 2015 ALL RIGHTS RESERVED

REVIEWED BY

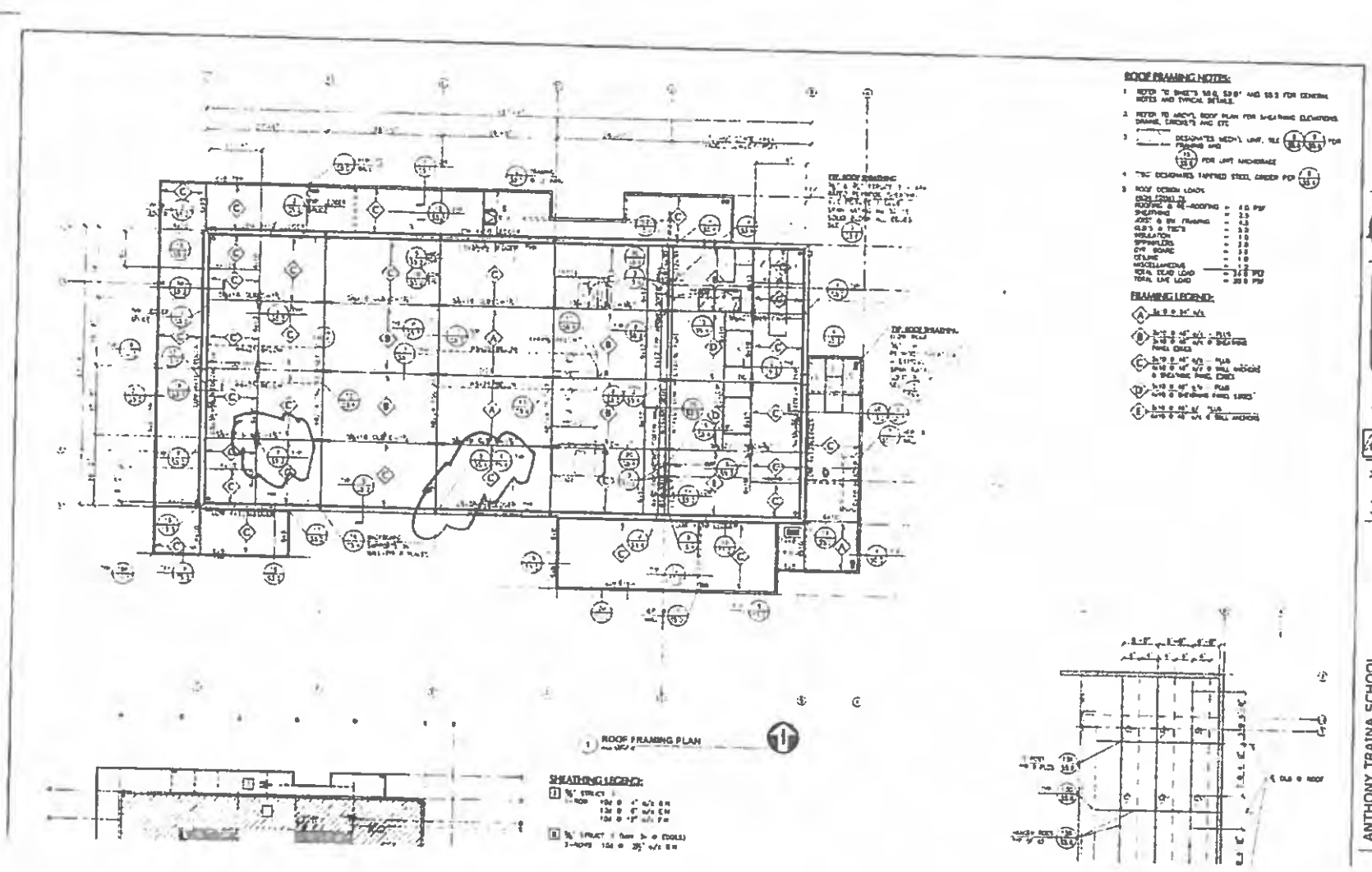

CCD No 26

REF PLAN S3.1

: AT CONTRACTORS
: (2)–3x4 NAILERS,
E OF FLANGE, w/ 5/8"ø
: @ 12" o/c IN EA.

IATCH BEAM FLANGE
5/8"ø CARRIAGE BOLTS
GGERED.

'8" MAX.
TYP.

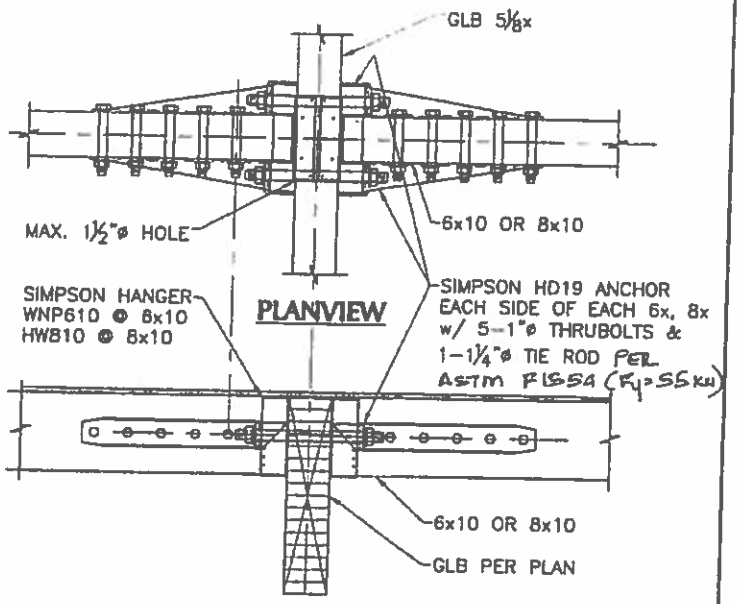

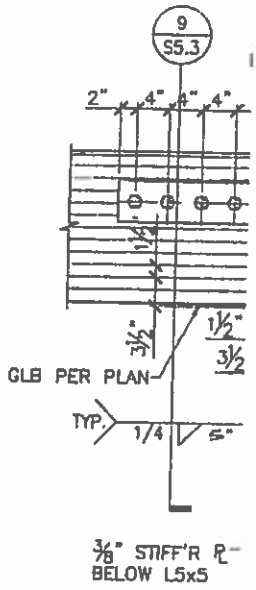

6

7

S5.3

CCD No 26
REF DETAIL

FF"R
SIDE

' PL w/
BOLTS

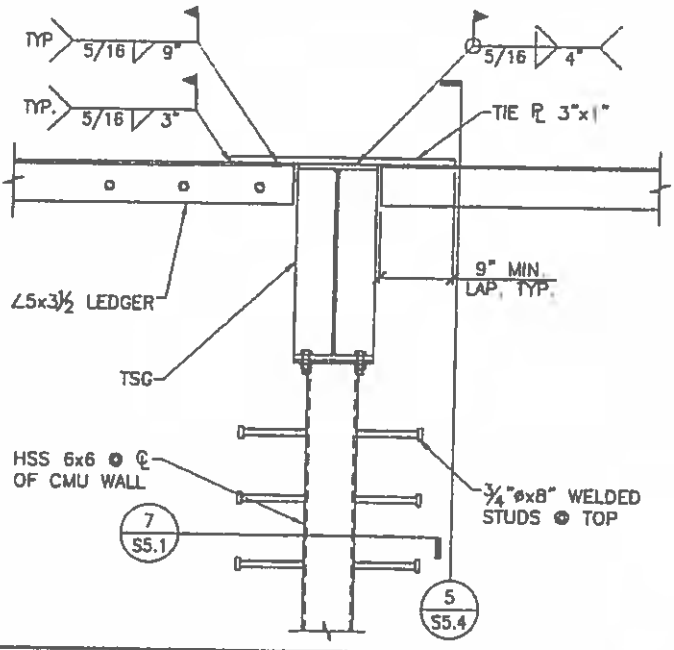

3

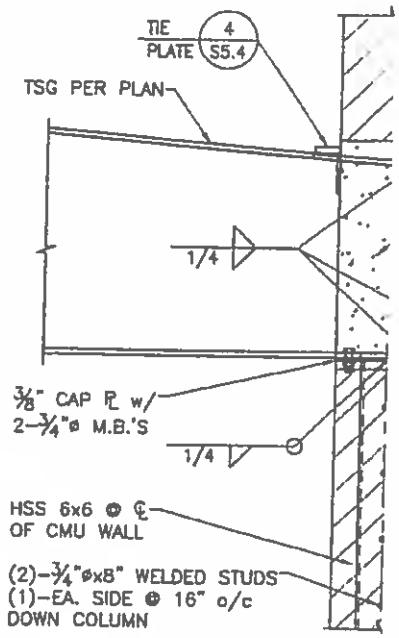

4

S5.4

CCD No 26
REF DETAILS

letter

DATE: 10/20/15

TO: Jefferson School District
1219 Whispering Wind Dr.
Tracy, CA 95377

ATTN: James Bridges

RE: Anthony Traina Gym and Performance Center
DSA Appl. #: 02-113192
COR #035

Dear James,

We have reviewed the contractor's pricing on COR #035 to provide furr ceiling framing and fire blocking below HD's at Room C07.

We find the pricing of $2,105.00 acceptable and recommend Board of Trustee acceptance.

District Authorization: _____
James W. Bridges

Date: 10/20/15

Thank you.

FROM: Nick Morrissey
pjhm architects
Project Manager

CC: Ramon Parocua, RGM
Kenneth Podany, PJHM
File 13

pjhm·architects
OC 24461 Ridge Route Drive #100 • Laguna Hills CA 92653 P 949-496-6191
SD 804 Pier View Way #103 • Oceanside CA 92054 P 760-730-5527
PJHM.COM

CHANGE ORDER REQUEST 035

Distribution to:
- OWNER ☐
- ARCHITECT ☐
- CONST. MANAGER ☐
- CONTRACTOR ☐
- FIELD ☐
- OTHER ☐

PROJECT: Anthony Traina Gym and Performance Center
4256 Windsong Drive
Tracy, CA 95377

TO: Nick Morrissey, PJHM Architects

Reference: RFI # ____ PCO # _____ ASI# _____
CCA # _____ CCD # ____ IB# _____

COR NUMBER: 035

DATE: October 12, 2015

PROJECT No.: JES-14-01

CONTRACT FOR: New Gymnasium

CONTRACT DATE: November 1, 2014

Description of work:
Furr ceiling framing and fire blocking below HD's at room C07 per meeting request.

1. Subcontractor Work (mark-up not to exceed 10%)
(Please attached all required backup, quantities, unit cost, etc., associated with work performed.)

1. Costs from Starke Structures	$ 1,983.42		
SUBTOTAL	$ 1,983.42		
Contractor mark-up on Sub work (not to exceed 5%)	$ 99.17		
	TOTAL - 1	$	2,082.59

2. Work Performed by Prime Contractor
(Please attached all required backup, quantities, unit cost, etc., associated with work performed.)

Materials	$ -		
Labor	$ -		
Equipment	$ -		
SUBTOTAL	$ -		
Prime Contractor OH&P (not to exceed 15%)	$ -		
	TOTAL - 2	$	-
	TOTAL - 1 & 2	$	2,082.59
Bond Premium (actual rate, 1.06%)		$	22.08
TOTAL PROPOSED CHANGE		**$**	**2,105.00**

Extension of Contract Time Proposed 1 Days.

Prepared by:
Ramon Parocua

Date October 12, 2015

Starke Structures Inc.
2200 Pine View Way, Suite A
Petaluma, CA 94954

Ph # 707-765-9933
Fax # 707-765-0233
Lic #673132

Change Order #12

Job: Anthony Traina Gym
4256 Windsong Dr.
Tracy, CA 95377

Contractor: RGM & Associates
3230 Monument Way
Concord, CA 94518

Reference: Email from Marc

Description: New ceiling & fire blocking at ceiling level in walls at room C07

1. Foreman	2	hours	$	90.00	hr	$180.00
2. Journeyman	16	hours	$	80.00	hr	$1,280.00
3. 2 x 6 Ledger	56	bf	$	0.60	m/bdft	$33.60
4. 2 x 6 Joists	120	bf	$	0.60	m/bdft	$72.00
5. Titan Bolts	12	@	$	1.50	ea	$18.00
6. 2 x 6 Blocks	68	bf	$	0.60	m/bdft	$40.80
7. U26	24	@	$	1.47	ea	$35.28
9. Tools/Equip./ Travel	16	@	$	8	hr	$128.00

Sub Total	$1,787.68
10% OH & P	$178.77
8.5% tax on materials	$16.97
Total	$1,983.42

Additional schedule days required to perform the above work = 1